Property Location 7 BRADLEY ST | Map ID D03/ / 110/000 / | Bldg Name | State Use 101
Vision ID 645 | Account # 4655 | Bldg # 1 | Sec # 1 of 1 | Card # 1 of 1 | Print Date 2/3/2020 1:14:27 PM

CURRENT OWNER

GRAYBILL JEFFREY & LAURA HULL

670 WEST END AVE APT 17C

NEW YORK NY 10025

1

TOPO / UTILITIES / STRT / ROAD / LOCATION

	3 Public Sewer	1 Public	1 Compo SE
	2 Public Water		

SUPPLEMENTAL DATA

Alt Prcl ID	53150408,409	Lift Hse	
Historic ID	46		
Census	505		
WestportC	J14		
Survey Ma	167		
Survey Ma			
GIS ID	D03110000	Assoc Pid#	

CURRENT ASSESSMENT

Description	Code	Appraised	Assessed
RES LAND	1-1	1,005,000	703,500
DWELLING	1-3	206,900	144,800
RES OUTBL	1-4	10,800	7,600
	Total	1,222,700	855,900

6158

WESTPORT, CT

VISION

RECORD OF OWNERSHIP

	BK-VOL/PAGE		SALE DATE	Q/U	V/I	SALE PRICE	VC
GRAYBILL JEFFREY & LAURA HULL	3556	0033	09-26-2014	Q	I	1,410,000	00
BISHOP MARGARET D EST OF	3536	0061	07-02-2014	U	I	0	29
BISHOP MARGARET D	0589	0167	02-08-1982	Q	I	197,000	00

PREVIOUS ASSESSMENTS (HISTORY)

Year	Code	Assessed	Year	Code	Assessed V	Year	Code	Assessed
2019	1-1	703,500	2018	1-1	703,500	2017	1-1	703,500
	1-3	144,800		1-3	144,800		1-3	144,800
	1-4	7,600		1-4	7,600		1-4	7,600
	Total	855900		Total	855900		Total	855900

EXEMPTIONS

Year	Code	Description	Amount
		Total	0.00

OTHER ASSESSMENTS

Code	Description	Number	Amount	Comm Int

This signature acknowledges a visit by a Data Collector or Assessor

ASSESSING NEIGHBORHOOD

Nbhd	Sub	Nbhd Name	B	Tracing	Batch
0001	C				

NOTES

M/167(91,93),

GAR + SHD ATT W/FURN

XF=SS ON GAR

ORIG BATHS

APPRAISED VALUE SUMMARY

Appraised Bldg. Value (Card)	206,900
Appraised Xf (B) Value (Bldg)	0
Appraised Ob (B) Value (Bldg)	10,800
Appraised Land Value (Bldg)	1,005,000
Special Land Value	0
Total Appraised Parcel Value	1,222,700
Valuation Method	C
Total Appraised Parcel Value	1,222,700

BUILDING PERMIT RECORD

Permit Id	Issue Date	Type	Description	Amount	Insp Date	% Comp	Date Comp	Comments
82803	06-26-2017	AL	Alterations	15,000	11-04-2017	100	06-28-2017	REMOVE PORTION OF WALL

VISIT / CHANGE HISTORY

Date	Id	Type	Is	Cd	Purpost/Result
11-04-2017	PG	2	5	01	Measured/No Interior Insp
10-03-2015	AG			39	Appointment - No-Show
08-17-2015	VA			10	Measu/LtrSnt - Letter Sent
08-03-2015	AG			02	Sat or >5PM Attm @ Int In
07-31-2015	AG			01	Measured/No Interior Insp
07-09-2015	VA			66	INSPECTION NOTICE SE
12-29-2005	MT			41	Hearing - Change

LAND LINE VALUATION SECTION

B	Use Code	Description	Zone	Land Type	Land Units		Unit Price	Size Adj	Site Index	Cond.	Nbhd.	Nbhd. Adj	Notes	Location Adjustment		Adj Unit P	Land Value
1	101	Single Family Re	A		0.220	AC	451,000	3.16518	6	1.00	320	3.200			1.0000		1,005,000
				Total Card Land Units	0.220	AC	Parcel Total Land Area			0.2200						Total Land Value	1,005,000

Property Location 7 BRADLEY ST | Map ID D03/ / 110/000 / | Bldg Name | State Use 101
Vision ID 645 | Account # 4655 | Bldg # 1 | Sec # 1 of 1 | Card # 1 of 1 | Print Date 2/3/2020 1:14:28 PM

CONSTRUCTION DETAIL

Element	Cd	Description
Style:	03	Colonial
Model	01	Residential
Grade:	09	C+
Stories:	2	2 Stories
Occupancy	1	
Exterior Wall 1	11	Clapboard
Exterior Wall 2		
Roof Structure:	03	Gable
Roof Cover	03	Asphalt Shingl
Interior Wall 1	05	Drywall
Interior Wall 2		
Interior Flr 1	12	Hardwood
Interior Flr 2		
Heat Fuel	02	Oil
Heat Type:	05	Hot Water
AC Type:	01	None
Total Bedrooms	04	4 Bedrooms
Total Bthrms:	2	2 Full Baths
Total Half Baths	0	
Total Xtra Fixtrs	1	
Total Rooms:	9	9 Rooms
Bath Style:	02	Average
Kitchen Style:	02	Average
Kitchens	1	
Whirlpool Tubs		
Hot Tubs		
Sauna (SF Area		
Fin Basement		
Fin Bsmt Qual		
Bsmt. Garages	0	
Interior Cond	A	
Fireplaces	1	
Ceiling Height	8.00	

CONSTRUCTION DETAIL (CONTINUED)

Element	Cd	Description
Fireplaces	1	
Ceiling Height	8.00	
Elevator		

CONDO DATA

Parcel Id		C		Owne	
		B		S	

Adjust Type	Code	Description	Factor%
Condo Flr			
Condo Unit			

COST / MARKET VALUATION

Building Value New	369,524
Year Built	1930
Effective Year Built	
Depreciation Code	A
Remodel Rating	
Year Remodeled	
Depreciation %	44
Functional Obsol	
External Obsol	
Trend Factor	1
Condition	
Condition %	
Percent Good	56
Cns Sect Rcnld	206,900
Dep % Ovr	
Dep Ovr Comment	
Misc Imp Ovr	
Misc Imp Ovr Comment	
Cost to Cure Ovr	
Cost to Cure Ovr Comment	

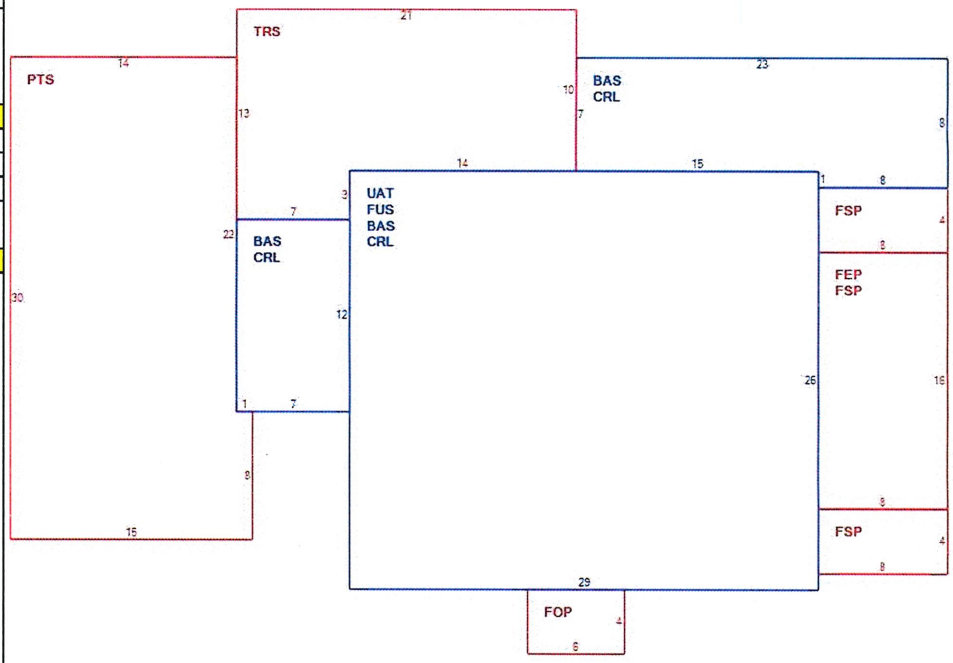

OB - OUTBUILDING & YARD ITEMS(L) / XF - BUILDING EXTRA FEATURES(B)

Code	Descript	Sub	Sub Ty	L/B	Units	Unit Pric	Yr Blt	Cond. C	% Gd	Grade	Grade A	Appr. V
GAR1	Garage	FR	Frame	L	483	31.37	1974	6	75	3	1.00	10,800
SHD1	Shed	FR	Frame	L	136	11.00	1974	1	0	3	1.00	0

BUILDING SUB-AREA SUMMARY SECTION

Code	Description	Living Area	Floor Area	Eff Area	Unit Cost	Undeprec Value
BAS	First Floor	1,007	1,007		166.56	167,721
CRL	Crawl Space	0	1,007		0.00	0
FEP	Porch, Enclosed	0	128		108.00	13,824
FOP	Porch, Open	0	24		34.70	833
FSP	Porch, Screen	0	192		41.64	7,995
FUS	Upper Story, Finished	754	754		166.56	125,583
PTS	Patio - Stone	0	428		24.91	10,660
TRS	Terrace - Stone	0	231		33.17	7,662
UAT	Attic, Unfinished	0	754		16.57	12,492
	Ttl Gross Liv / Lease Area	1,761	4,525			346,770

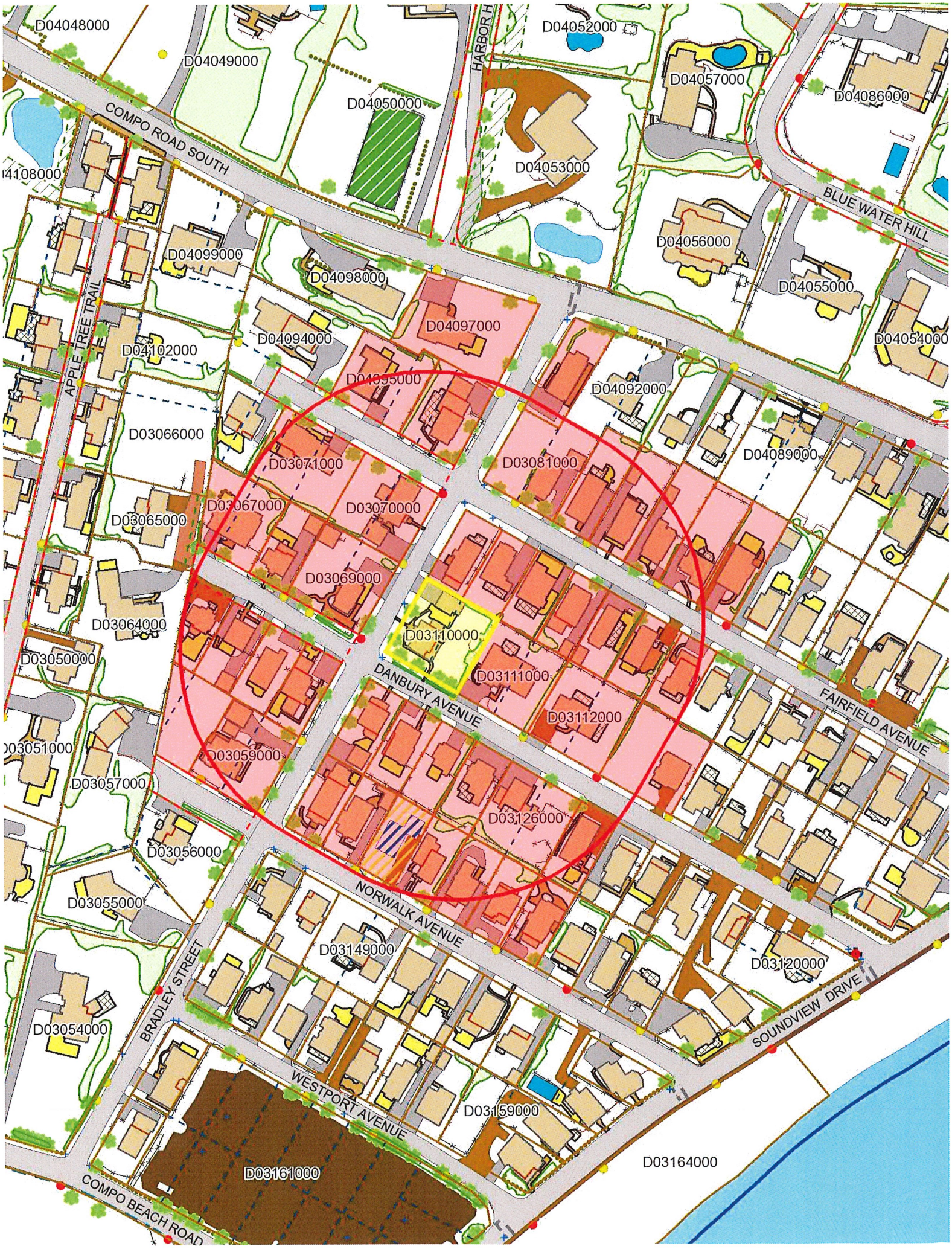
D04048000
D04049000
D04052000
D04057000
D04086000
D04050000
COMPO ROAD SOUTH
HARBOR H
D04053000
BLUE WATER HILL
D04056000
D04099000
D04098000
D04055000
D04097000
D04094000
D04054000
D04102000
APPLE TREE TRAIL
D04095000
D04092000
D03066000
D03071000
D03081000
D04089000
D03067000
D03070000
D03065000
D03069000
D03064000
D03110000
D03050000
DANBURY AVENUE
D03111000
FAIRFIELD AVENUE
D03112000
D03059000
D03057000
D03126000
D03056000
D03055000
NORWALK AVENUE
D03149000
D03120000
BRADLEY STREET
SOUNDVIEW DRIVE
D03054000
WESTPORT AVENUE
D03159000
D03164000
D03161000
COMPO BEACH ROAD

250 foot Abutters List Report

Westport, CT
June 12, 2020

Subject Property:

Parcel Number: D03110000
CAMA Number: D03110000
Property Address: 7 BRADLEY ST

Mailing Address: GRAYBILL JEFFREY & LAURA HULL
670 WEST END AVE APT 17C
NEW YORK, NY 10025

Abutters:

Parcel Number: D03058000
CAMA Number: D03058000
Property Address: 28 NORWALK AVE

Mailing Address: KLABER ADAM
28 NORWALK AVE
WESTPORT, CT 6880

Parcel Number: D03059000
CAMA Number: D03059000
Property Address: 12 BRADLEY ST

Mailing Address: 12 BRADLEY STREET LLC
12 BRADLEY ST
WESTPORT, CT 6880

Parcel Number: D03060000
CAMA Number: D03060000
Property Address: 10 BRADLEY ST

Mailing Address: DIPPEL THOMAS A AND NOLTE ANNE E
10 BRADLEY ST
WESTPORT, CT 6880

Parcel Number: D03061000
CAMA Number: D03061000
Property Address: 33 DANBURY AVE

Mailing Address: ROSEN MICHAEL
33 DANBURY AVE
WESTPORT, CT 6880

Parcel Number: D03062000
CAMA Number: D03062000
Property Address: 35 DANBURY AVE

Mailing Address: BERG THEODORE & OESTERHUS HILDE
35 DANBURY AVE
WESTPORT, CT 6880

Parcel Number: D03063000
CAMA Number: D03063000
Property Address: 37 DANBURY AVE

Mailing Address: LIU MARY JANE
37 DANBURY AVE
WESTPORT, CT 6880

Parcel Number: D03067000
CAMA Number: D03067000
Property Address: 38 DANBURY AVE

Mailing Address: SMITH SCOTT
38 DANBURY AVE
WESTPORT, CT 6880

Parcel Number: D03068000
CAMA Number: D03068000
Property Address: 36 DANBURY AVE

Mailing Address: UMAN JULIE ANNE
3 ELLIOT LN
WESTPORT, CT 6880

Parcel Number: D03069000
CAMA Number: D03069000
Property Address: 8 BRADLEY ST

Mailing Address: PHILLIPS JOANNE G
8 BRADLEY ST
WESTPORT, CT 6880

Parcel Number: D03070000
CAMA Number: D03070000
Property Address: 6 BRADLEY ST

Mailing Address: LEYDEN THOMAS P & RITA A
6 BRADLEY ST
WESTPORT, CT 6880

250 foot Abutters List Report

Westport, CT
June 12, 2020

Parcel Number:	D03071000	Mailing Address:	BAUM STEPHEN G TRUSTEE 39 FAIRFIELD AVE WESTPORT, CT 6880
CAMA Number:	D03071000		
Property Address:	39 FAIRFIELD AVE		
Parcel Number:	D03081000	Mailing Address:	MARSHALL MARCIA ET AL 15 TURKEY HILL RD N WESTPORT, CT 6880
CAMA Number:	D03081000		
Property Address:	30 FAIRFIELD AVE		
Parcel Number:	D03082000	Mailing Address:	YU RICHARD A & SANDRA A 28 FAIRFIELD AVE WESTPORT, CT 6880
CAMA Number:	D03082000		
Property Address:	28 FAIRFIELD AVE		
Parcel Number:	D03083000	Mailing Address:	CODY JOHN E & EVALENA D PO BOX 5168 WESTPORT, CT 6880
CAMA Number:	D03083000		
Property Address:	26 FAIRFIELD AVE		
Parcel Number:	D03084000	Mailing Address:	WESTPORT REALTY & DEVELOPMENT LLC 290 RAILROAD AVE GREENWICH, CT 6830
CAMA Number:	D03084000		
Property Address:	24 FAIRFIELD AVE		
Parcel Number:	D03085000	Mailing Address:	STREICKER MICHAEL F & BRIDGET S H 22 FAIRFIELD AVE WESTPORT, CT 6880
CAMA Number:	D03085000		
Property Address:	22 FAIRFIELD AVE		
Parcel Number:	D03086000	Mailing Address:	SCHIAVONE CHRISTIAN R & JACQUELINE C 20 FAIRFIELD AVE WESTPORT, CT 6880
CAMA Number:	D03086000		
Property Address:	20 FAIRFIELD AVE		
Parcel Number:	D03103000	Mailing Address:	ISAACS MARC J & JILL W 21 FAIRFIELD AVE WESTPORT, CT 6880
CAMA Number:	D03103000		
Property Address:	21 FAIRFIELD AVE		
Parcel Number:	D03104000	Mailing Address:	ORLOSKI DIANE & SKOLNICK STANLEY R 23 FAIRFIELD AVE WESTPORT, CT 6880
CAMA Number:	D03104000		
Property Address:	23 FAIRFIELD AVE		
Parcel Number:	D03105000	Mailing Address:	WOJCIK CHRISTINE A & LAREW ANDREW E 25 FAIRFIELD AVE WESTPORT, CT 6880
CAMA Number:	D03105000		
Property Address:	25 FAIRFIELD AVE		
Parcel Number:	D03106000	Mailing Address:	SIR-27 FAIRFIELD LLC 943 POST ROAD EAST WESTPORT, CT 6880
CAMA Number:	D03106000		
Property Address:	27 FAIRFIELD AVE		
Parcel Number:	D03107000	Mailing Address:	POLLMANN ANNETTE S & STEFAN 29 FAIRFIELD AVE WESTPORT, CT 6880
CAMA Number:	D03107000		
Property Address:	29 FAIRFIELD AVE		

250 foot Abutters List Report

Westport, CT
June 12, 2020

Parcel Number:	D03108000	Mailing Address:	LIPTON JUDITH
CAMA Number:	D03108000		225 W 86 ST
Property Address:	31 FAIRFIELD AVE		NEW YORK, NY 10024
Parcel Number:	D03109000	Mailing Address:	BANKS MICHAEL & MELISSA
CAMA Number:	D03109000		5 BRADLEY ST
Property Address:	5 BRADLEY ST		WESTPORT, CT 6880
Parcel Number:	D03111000	Mailing Address:	ALBERT MARTIN J & JANET S
CAMA Number:	D03111000		22 DANBURY AVE
Property Address:	22 DANBURY AVE		WESTPORT, CT 6880
Parcel Number:	D03112000	Mailing Address:	STERN BRADLEY CHARLES
CAMA Number:	D03112000		18 DANBURY AVE
Property Address:	18 DANBURY AVE		WESTPORT, CT 6880
Parcel Number:	D03113000	Mailing Address:	VALESKI JOSEPH MARK
CAMA Number:	D03113000		61 KINGS HWY S
Property Address:	16 DANBURY AVE		WESTPORT, CT 6880
Parcel Number:	D03114000	Mailing Address:	HERMAN HENRY L TR
CAMA Number:	D03114000		14 DANBURY AVE
Property Address:	14 DANBURY AVE		WESTPORT, CT 6880
Parcel Number:	D03125000	Mailing Address:	17 DANBURY AVE WESTPORT LLC
CAMA Number:	D03125000		55 WEST ROAD
Property Address:	17 DANBURY AVE		EASTON, CT 6612
Parcel Number:	D03126000	Mailing Address:	CADY DIANE TR
CAMA Number:	D03126000		21 DANBURY AVE
Property Address:	21 DANBURY AVE		WESTPORT, CT 6880
Parcel Number:	D03127000	Mailing Address:	GOTTFRIED DENNIS & NANCY WEIL
CAMA Number:	D03127000		45 COVENTRY LN
Property Address:	23 DANBURY AVE		HARWINTON, CT 06791-2414
Parcel Number:	D03128000	Mailing Address:	SPENCER MICHELENE
CAMA Number:	D03128000		25 DANBURY AVE
Property Address:	25 DANBURY AVE		WESTPORT, CT 6880
Parcel Number:	D03129000	Mailing Address:	LAROCCA PAMELA
CAMA Number:	D03129000		27 DANBURY AVE
Property Address:	27 DANBURY AVE		WESTPORT, CT 6880
Parcel Number:	D03130000	Mailing Address:	OTOOLE WILLIAM P & MARY K
CAMA Number:	D03130000		29 DANBURY AVE
Property Address:	29 DANBURY AVE		WESTPORT, CT 6880

250 foot Abutters List Report

Westport, CT
June 12, 2020

Parcel Number:	D03131000	Mailing Address:	ALLEN PETER TR AND NANCY HEALY TR 11 BRADLEY ST WESTPORT, CT 6880
CAMA Number:	D03131000		
Property Address:	11 BRADLEY ST		
Parcel Number:	D03132000	Mailing Address:	GILLIN PATRICIA ANN 2116 THEALL RD RYE, NY 10580
CAMA Number:	D03132000		
Property Address:	20 NORWALK AVE		
Parcel Number:	D03133000	Mailing Address:	KAPLAN MICHAEL J & MERYL E 18 NORWALK AVE WESTPORT, CT 6880
CAMA Number:	D03133000		
Property Address:	18 NORWALK AVE		
Parcel Number:	D03134000	Mailing Address:	WHITNEY DONNA J 16 NORWALK AVE WESTPORT, CT 6880
CAMA Number:	D03134000		
Property Address:	16 NORWALK AVE		
Parcel Number:	D03135000	Mailing Address:	RODRIGUEZ SABINO III 14 NORWALK AVE WESTPORT, CT 6880
CAMA Number:	D03135000		
Property Address:	14 NORWALK AVE		
Parcel Number:	D03136000	Mailing Address:	RODRIGUEZ SABINO III 12 NORWALK AVE WESTPORT, CT 6880
CAMA Number:	D03136000		
Property Address:	12 NORWALK AVE		
Parcel Number:	D03137000	Mailing Address:	SHEINBAUM HILDY & MARC 10 NORWALK AVE WESTPORT, CT 6880
CAMA Number:	D03137000		
Property Address:	10 NORWALK AVE		
Parcel Number:	D04093000	Mailing Address:	BODELL MARRILY Z TRUSTEE 1 BRADLEY ST WESTPORT, CT 6880
CAMA Number:	D04093000		
Property Address:	1 BRADLEY ST		
Parcel Number:	D04095000	Mailing Address:	WESTPORT REAL ESTATE PARTNERS 5 TWIST HILL ROAD NEWTOWN, CT 6470
CAMA Number:	D04095000		
Property Address:	38 FAIRFIELD AVE		
Parcel Number:	D04096000	Mailing Address:	FRISA 3 LLC 9 BROOKSIDE DR WESTPORT, CT 6880
CAMA Number:	D04096000		
Property Address:	4 BRADLEY ST		
Parcel Number:	D04097000	Mailing Address:	KJELLGREN PER A & VIVEKA 312 COMPO RD S WESTPORT, CT 6880
CAMA Number:	D04097000		
Property Address:	312 COMPO RD S		

Notice Letter

To whom it may concern: **Date** Application Submitted: 25 June 2020

This letter is being sent to you to make you aware of the Application listed below.

Notice is hereby given that Don Fairbanks *(Print Applicant's Full Name)* has filed a ZBA Variance *(List Type of Application)*

For Listed Proposed Project Description below ***Copy from page 1- line 7:***

Raise existing home to above FEMA base flood elevation, add garage and 2 story living space, & expand existing second floor sun porch

With the Town of Westport / Zoning Board of Appeals

For approval for 7 Bradley Street *(Address of Property)*

The public hearing for this application will be, scheduled at the discretion of the Zoning Board of Appeals.
A Legal Notice of Public Hearing for this application will be, published twice prior to public hearing in a local newspaper.

To view this application details please:
Visit **www.westportct.gov** Click: ***Department & Services*** / P&Z Dept, ***Pending Applications***, or
Visit the P&Z office in room 203 at *Town Hall, 110 Myrtle Ave, Westport, CT 06880. Monday - Friday 8:30 - 4:30*

To submit a letter of support or objection for above listed project: **E-mail** your letter to **pandz@westportct.gov.**

For Future Reference:
If you wish to receive E-mail Notifications of future hearings follow these directions:

1. Go to Town Website at ***www.westportct.gov.***
2. On left tool bar *Click:* ***Sign up for e-Notification****, Subscription page will open.*
3. Type in your E-mail Address, *twice as requested.*
4. *Click* each ***Board / Committee/ Category*** you want to receive an *e-Notification* from.
5. When you complete your selections, *Click:* ***Subscribe.***
6. You will soon receive an E-mail confirmation.

Thank you, Don W. Fairbanks
(Print Applicant's Full Name)