BELTA FARM SUBDIVISION

128 BAYBERRY LANE
WESTPORT, CONNECTICUT

OWNER/APPLICANT:

Estate of Dina M. &
James S. Belta
128 Bayberry Lane
Westport, CT 06880

CIVIL ENGINEERS/LAND SURVEYOR:

DYMAR

800 Main Street South · Southbury, Ct. 06488 · (203) 267-1046 · Fax (203) 267-1547
ENGINEERING · PLANNING · SURVEYING · DEVELOPMENT SERVICES

LAND USE ATTORNEY

John F. Fallon, Esq.
53 Sherman Street
Fairfield, CT 06824
(P) 203-256-3247
(F) 203-256-8796

SOIL SCIENTIST & BIOLOGIST:

Landtech
518 Riverside Avenue
Westport, CT 06880

DRAWING PACKAGE:

SURVEY DRAWINGS

	RECORD OPEN SPACE SUBDIVISION MAP
	PROPERTY LINE SURVEY (EXISTING CONDITIONS)

CIVIL ENGINEERING DRAWINGS

C-1	GENERAL LEGEND, ABBREVIATIONS & NOTES
C-2	EXISTING CONDITIONS SITE ANALYSIS MAP
C-3	EXISTING CONDITIONS MAP - CONVENTIONAL LOT LAYOUT PLAN
C-4	EXISTING CONDITIONS MAP - CLUSTER LOT LAYOUT PLAN
C-5 (A&B)	SITE DEVELOPMENT & GRADING PLANS
C-5C	TEST HOLE DATA
C-5D	TEST HOLE DATA & SEPTIC FEASIBILITY DATA
C-6 (A&B)	PHASE 1 - ROAD AND INFRASTRUCTURE SEDIMENT AND EROSION CONTROL PLAN
C-6C	SEDIMENT AND EROSION CONTROL NARRATIVE
C-6D	SEDIMENT AND EROSION CONTROL CONSTRUCTION STANDARDS AND MISCELLANEOUS DETAILS
C-6E	SEDIMENT AND EROSION CONTROL DETAILS
C-7A	CONSTRUCTION ROAD PLAN & PROFILE
C-7B	DRAINAGE PLAN & PROFILE
C-8A	PAVING, STORM SEWER & UTILITY DETAILS
C-8B	MISCELLANEOUS SITE DETAILS
C-8C	DETENTION BASIN, STORM SEWER AND EMBANKMENT DETAILS
C-9A	CONSTRUCTION SPECIFICATIONS & STANDARDS
C-9B	EARTHWORK SPECIFICATIONS
C-10	INTERSECTION SIGHT LINE PLAN AND PROFILE
C-11A	STREET TREE LANDSCAPE PLAN
C-11B	WETLANDS BUFFER PLANTING PLAN
C-12	DETENTION BASIN LANDSCAPE PLAN

MARK E. LANCOR, P.E. #12369

Issued to	Date
Inland Wetlands	05-14-20
Planning & Zoning	-
Last Revised	-

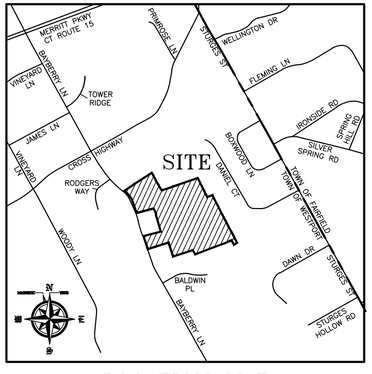

LOCATION MAP
SCALE: 1"=1000'

F:\00834 - Bayberry Lane-Westport\Civil\Dwg\000-COVER.dwg, Cover, 5/13/2020 12:22:04 PM, gemus, AutoCAD PDF (Web and Mobile).pc3, ARCH full bleed D (24.00 x 36.00 Inches), 1:1

LOCATION MAP

SCALE: 1" = 1000'

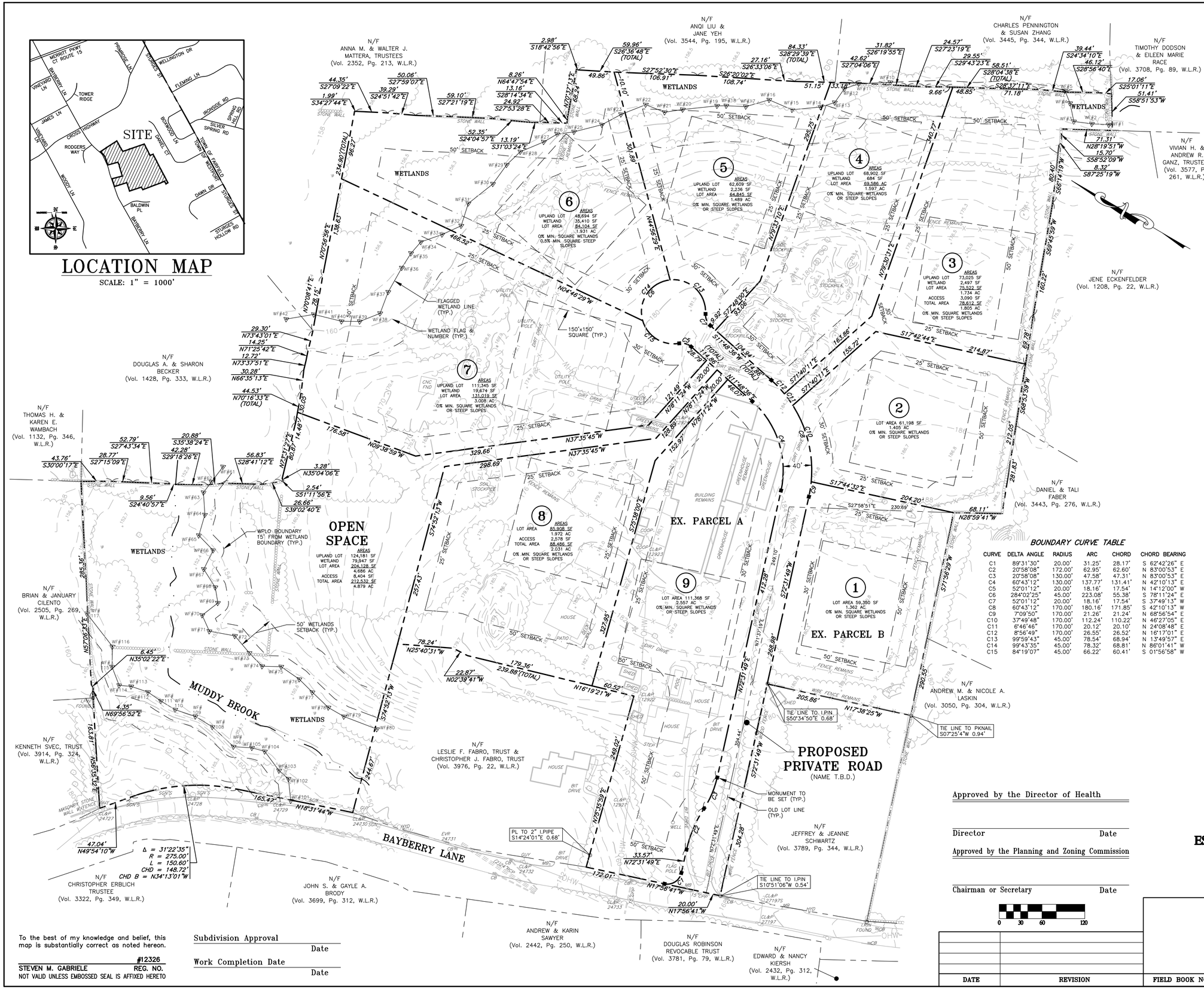

NOTES:

1. This map has been prepared pursuant to the Regulations of Connecticut State Agencies Sections 20–300b–1 through 20–300b–20 and the "Standards for Surveys and Maps in the State of Connecticut" as adopted by the Connecticut Association of Land Surveyors, Inc. on September 26, 1996.
   - Type of Survey: Subdivision Plan
   - Boundary Determination Category: Outside boundary: Dependant Re–Survey; Subdivision lots: Original Survey
   - Class of Accuracy: A–2
2. Area of Parcel A: 936,745 sf, 21.505 acres
   Area of Parcel B: 67,233 sf, 1.543 acres
   Total area of parcels: 1,003,978, 23.048 acres
3. Owner: Estate of Dina M. & James S. Belta
   Co–Owner: Gregory Belta & Concettina G. Caruso
   Address of Gregory Belta: 128 Bayberry Lane, Westport, CT 06880
   Address of Concettina G. Caruso: 201 Beagling Hill Circle, Fairfield, CT 06824

   Parcel A: Vol. 3467, Pg. 140, W.L.R.
   128 Bayberry Lane
   Map G13, Lot 20

   Parcel B: Vol. 3467, Pg. 140, W.L.R.
   126 Bayberry Lane
   Map G13, Lot 21
4. Zone: AAA
5. Map References:

   A. "Zoning Map Of Property, Prepared For, Est Of James S. & Dina M. Belta, 128 Bayberry Lane, Westport, CT., Dated 3/17/16, Scale: 1"=60', As prepared by Dennis A. Deilus – Land Surveyors, Norwalk, CT.".

   B. "Map Of Property, To Be Acquired, From, Evelyn Gosnell Barger, By, Helen C. Beyea, Westport, Conn., Dated Sept. 1939, 1 993/1000 Acres, Scale 1"=30'". (Map #1428, Westport Land Records)

   C. "Survey, Prepared For, Constance B. Cheney, Westport, Conn., Scale 1"=30', Dated Jan, 1965". (Map #5906, W.L.R.)

   D. "Town Of Westport, Map Showing, Property, To Be Acquired By The, Town Of Westport, From, James S. Belta, Town Engineer, Scale: 1"=40'–0, Dated Oct. 1964, Dwg.no.PL–B–7". (Map #5914, W.L.R.)

   E. "Survey, Prepared For, James E. And Evelyn L. Myer, Westport, Conn., Scale 1"=50', Dated Dec. 1954". (Map #3866, W.L.R.)

   F. "Map Of Property, Prepared For, Robert A. Myer, No. 122 Bayberry Lane, Westport, Conn., Scale: 1"=30', Dated Sep. 1992, As prepared by Leonard Surveyors". (Map #8946, W.L.R.)

   G. "Map Of Property, Prepared For, Herbert E. Baldwin, Westport, Conn., Scale: 1"=50', Dated September 5, 1968, As prepared by Leo Leonard–Civil Eng'r & Surveyor". (Map #6606, W.L.R.)

   H. "Open Space, Subdivision Map, Of Property, Prepared For, R&R Building Company, At Westport, Conn., Scale 1"=60', Dated February 1, 1977, Revised to March 17, 1977, As prepared by Leonard Surveyors". (Map #7462, W.L.R.)

   I. "Map Of Property, For, Catirene Restaino, Westport, Conn., Scale 1"=60', Dated June 1958". (Map #4596, W.L.R.)

   J. "Subdivision Plan, Sturges Highway, Westport, Connecticut, Prepared For Sturges Associates, Dated February 7, 1986, Revised to 9–25–86, Scale: 1"=60', As prepared by Spath–Bjorkland Associates Inc., Monroe, Connecticut". (Map #8444, W.L.R.)

   K. "Composite Map, Subdivision Plan, Sturges Wood, A Resubdivision of Lots 7 & 8, Daniel Court, And Other Lands On, Sturges Highway And Cross Highway, Westport, Connecticut, Prepared For, Sturges Associates, Dated January 15, 1988, Revised to 9–12–89, Scale: 1"=100', As prepared by Spath–Bjorkland Associates, Inc., Monroe, Connecticut". (Map #8795, W.L.R.)

   L. "Survey, Prepared For, Leonard J. Palceski, Westport, Conn., Dated March 1954, Scale 1"=60'". (Map #3635, W.L.R.)
6. The location of any underground utilities shown on this plan are approximate. Additionally, other such underground features may exist on the site, the existence of which are unknown to DYMAR. The existence, size and location of all such underground features must be determined and verified in the field by the appropriate agency prior to any future construction. Prior to any excavation on or near this site the contractor shall contact "Call Before You Dig" at 1–800–922–4455 at least 72 hours prior to excavation.
7. Error of Clousre: 1 in 50,624
8. The inland wetlands shown on this plan were flagged in the field by Christopher P. Allan, of Land–Tech Consultants, Inc., Westport, CT, and field located by Dennis A. Deilus–Land Surveyors in 2016.
9. The parcels are located in Zone X (area outside the 500–year flood plain), as shown on the Federal Flood Insurance Rate Map No. 09001C0412F, Dated June 18, 2010.
10. The contours and topographic features shown on this plan are from an aerial survey prepared by Golden Aerial Surveys, Newtown, CT. Additional detailed topographical features and elevations are from field surveys conducted by this office in 2019 & 2020. Vertical Datum is NAVD 1988 as determined by Global Positioning System.

BOUNDARY CURVE TABLE

CURVE	DELTA ANGLE	RADIUS	ARC	CHORD	CHORD BEARING
C1	89°31'30"	20.00'	31.25'	28.17'	S 62°42'26" E
C2	20°58'08"	172.00'	62.95'	62.60'	N 83°00'53" E
C3	20°58'08"	130.00'	47.58'	47.31'	N 83°00'53" E
C4	60°43'12"	130.00'	137.77'	131.41'	N 42°10'13" E
C5	52°01'12"	20.00'	18.16'	17.54'	N 14°12'00" W
C6	284°02'25"	45.00'	223.08'	55.38'	S 78°11'24" E
C7	52°01'12"	20.00'	18.16'	17.54'	S 37°49'13" W
C8	60°43'12"	170.00'	180.16'	171.85'	S 42°10'13" W
C9	7°09'50"	170.00'	21.26'	21.24'	N 68°56'54" E
C10	37°49'48"	170.00'	112.24'	110.22'	N 46°27'05" E
C11	6°46'46"	170.00'	20.12'	20.10'	N 24°08'48" E
C12	8°56'49"	170.00'	26.55'	26.52'	N 16°17'01" E
C13	99°59'43"	45.00'	78.54'	68.94'	N 13°49'57" E
C14	99°43'35"	45.00'	78.32'	68.81'	N 86°01'41" W
C15	84°19'07"	45.00'	66.22'	60.41'	S 01°56'58" W

Approved by the Director of Health

Director Date

Approved by the Planning and Zoning Commission

Chairman or Secretary Date

0 30 60 120

DATE	REVISION

Subdivison Map
Showing

BELTA FARM SUBDIVISION

PREPARED FOR

ESTATE OF JAMES S. & DINA M. BELTA

126 & 128 BAYBERRY LANE
WESTPORT, CONNECTICUT
MARCH 25, 2020 SCALE: 1"=60'
SHEET 1 OF 1

DYMAR
800 Main Street South · Southbury, CT. · 06488–2210 · (203) 267–1046 · Fax (203) 267–1547
ENGINEERING · PLANNING · SURVEYING · DEVELOPMENT SERVICES

FIELD BOOK NO.	–	PROJECT NO.	0934

To the best of my knowledge and belief, this map is substantially correct as noted hereon.

STEVEN M. GABRIELE #12326 REG. NO.
NOT VALID UNLESS EMBOSSED SEAL IS AFFIXED HERETO

Subdivision Approval
Date

Work Completion Date
Date

F:\0934 - Bayberry Lane-Westport\Survey\A-2-Subdivision.dwg, Sub, 5/13/2020 12:22:06 PM, genius, AutoCAD PDF (Web and Mobile).pc3, ARCH full bleed D (24.00 x 36.00 Inches), 1:1

LOCATION MAP

SCALE: 1" = 1000'

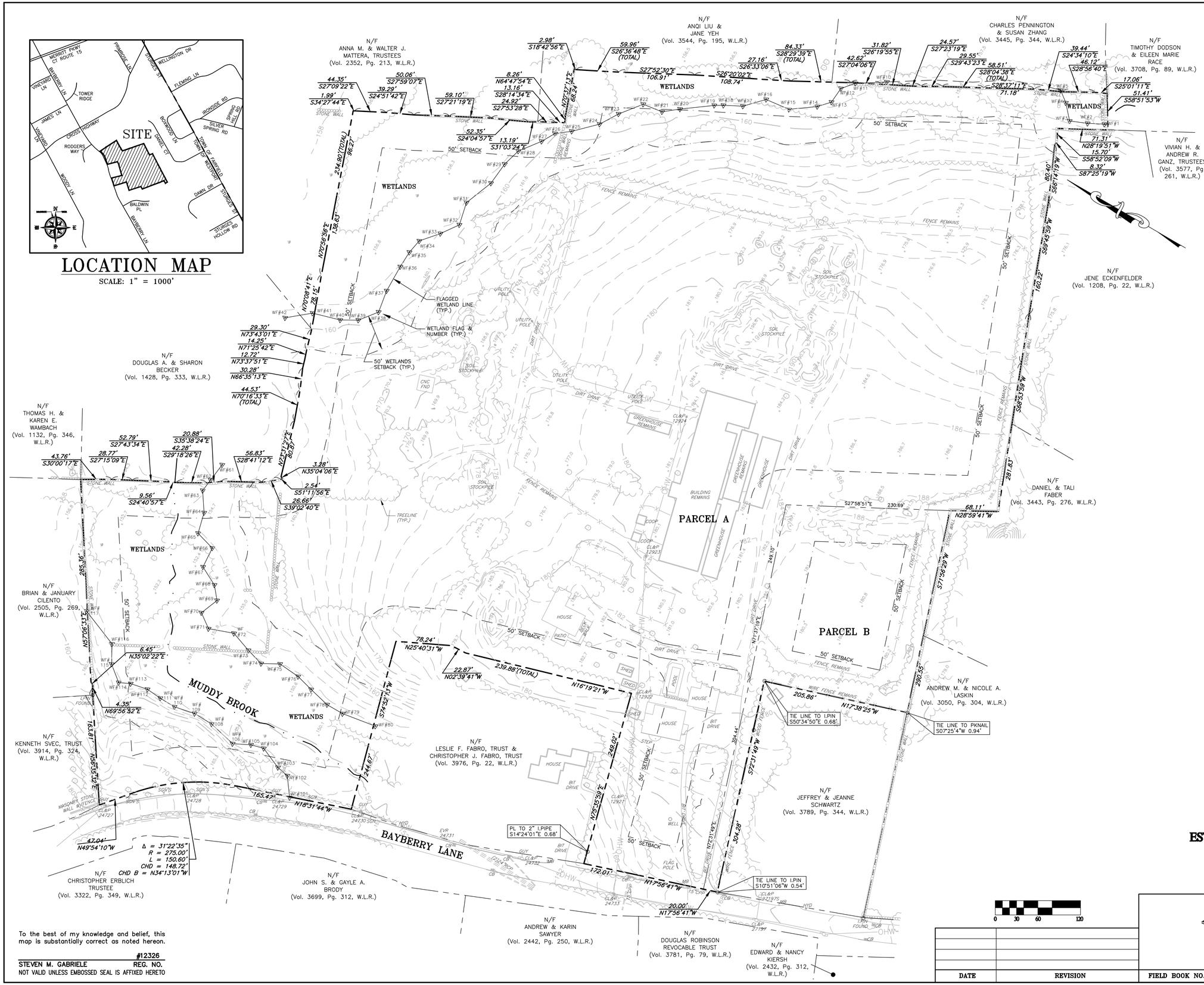

NOTES:

1. This map has been prepared pursuant to the Regulations of Connecticut State Agencies Sections 20–300b–1 through 20–300b–20 and the "Standards for Surveys and Maps in the State of Connecticut" as adopted by the Connecticut Association of Land Surveyors, Inc. on September 26, 1996.
   - Type of Survey: Existing Conditions Plan
   - Boundary Determination Category: Dependant Re–Survey
   - Class of Accuracy: A–2
2. Area of Parcel A: 936,745 sf, 21.505 acres
   Area of Parcel B: 67,233 sf, 1.543 acres
   Total area of parcels: 1,003,978, 23.048 acres
3. Owner: Estate of Dina M. & James S. Belta
   Co–Owner: Gregory Belta & Concettina G. Caruso
   Address of Gregory Belta: 128 Bayberry Lane, Westport, CT 06880
   Address of Concettina G. Caruso: 201 Beagling Hill Circle, Fairfield, CT 06824

   Parcel A: Vol. 3467, Pg. 140, W.L.R.
   128 Bayberry Lane
   Map G13, Lot 20

   Parcel B: Vol. 3467, Pg. 140, W.L.R.
   126 Bayberry Lane
   Map G13, Lot 21
4. Zone: AAA
5. Map References:

   A. "Zoning Map Of Property, Prepared For, Est Of James S. & Dina M. Belta, 128 Bayberry Lane, Westport, CT., Dated 3/17/16, Scale: 1"=60', As prepared by Dennis A. Deilus – Land Surveyors, Norwalk, CT.".

   B. "Map Of Property, To Be Acquired, From, Evelyn Gosnell Barger, By, Helen C. Beyea, Westport, Conn., Dated Sept. 1939, 1 993/1000 Acres, Scale 1"=30'". (Map #1428, Westport Land Records)

   C. "Survey, Prepared For, Constance B. Cheney, Westport, Conn., Scale 1"=30', Dated Jan, 1965". (Map #5906, W.L.R.)

   D. "Town Of Westport, Map Showing, Property, To Be Acquired By The, Town Of Westport, From, James S. Belta, Town Engineer, Scale: 1"=40'–0, Dated Oct. 1964, Dwg.no.PL–B–7". (Map #5914, W.L.R.)

   E. "Survey, Prepared For, James E. And Evelyn L. Myer, Westport, Conn., Scale 1"=50', Dated Dec. 1954". (Map #3866, W.L.R.)

   F. "Map Of Property, Prepared For, Robert A. Myer, No. 122 Bayberry Lane, Westport, Conn., Scale: 1"=30', Dated Sep. 1992, As prepared by Leonard Surveyors". (Map #8946, W.L.R.)

   G. "Map Of Property, Prepared For, Herbert E. Baldwin, Westport, Conn., Scale: 1"=50', Dated September 5, 1968, As prepared by Leo Leonard–Civil Eng'r & Surveyor". (Map #6606, W.L.R.)

   H. "Open Space, Subdivision Map, Of Property, Prepared For, R&R Building Company, At Westport, Conn., Scale 1"=60', Dated February 1, 1977, Revised to March 17, 1977, As prepared by Leonard Surveyors". (Map #7462, W.L.R.)

   I. "Map Of Property, For, Catirene Restaino, Westport, Conn., Scale 1"=60', Dated June 1958". (Map #4596, W.L.R.)

   J. "Subdivision Plan, Sturges Highway, Westport, Connecticut, Prepared For Sturges Associates, Dated February 7, 1986, Revised to 9–25–86, Scale: 1"=60', As prepared by Spath–Bjorkland Associates Inc., Monroe, Connecticut". (Map #8444, W.L.R.)

   K. "Composite Map, Subdivision Plan, Sturges Wood, A Resubdivision of Lots 7 & 8, Daniel Court, And Other Lands On, Sturges Highway And Cross Highway, Westport, Connecticut, Prepared For, Sturges Associates, Dated January 15, 1988, Revised to 9–12–89, Scale: 1"=100', As prepared by Spath–Bjorkland Associates, Inc., Monroe, Connecticut". (Map #8795, W.L.R.)

   L. "Survey, Prepared For, Leonard J. Palceski, Westport, Conn., Dated March 1954, Scale 1"=60'". (Map #3635, W.L.R.)
6. The location of any underground utilities shown on this plan are approximate. Additionally, other such underground features may exist on the site, the existence of which are unknown to DYMAR. The existence, size and location of all such underground features must be determined and verified in the field by the appropriate agency prior to any future construction. Prior to any excavation on or near this site the contractor shall contact "Call Before You Dig" at 1–800–922–4455 at least 72 hours prior to excavation.
7. The inland wetlands shown on this plan were flagged in the field by Christopher P. Allan, of Land–Tech Consultants, Inc., Westport, CT, on September 29, 2016 and field located by Dennis A. Deilus–Land Surveyors in 2016. DYMAR completed a boundary survey on January 6, 2020. The wetlands flagging was checked in the field by DYMAR on January 27, 2020.
8. The parcels are located in Zone X (area outside the 500–year flood plain), as shown on the Federal Flood Insurance Rate Map No. 09001C0412F, Dated June 18, 2010.
9. The contours and topographic features shown on this plan are from an aerial survey prepared by Golden Aerial Surveys, Newtown, CT. Additional detailed topographical features and elevations are from field surveys conducted by this office in 2019 & 2020. Vertical Datum is NAVD 1988 as determined by Global Positioning System.

To the best of my knowledge and belief, this map is substantially correct as noted hereon.

#12326
STEVEN M. GABRIELE REG. NO.
NOT VALID UNLESS EMBOSSED SEAL IS AFFIXED HERETO

Existing Conditions Plan

PREPARED FOR

ESTATE OF JAMES S. & DINA M. BELTA

126 & 128 BAYBERRY LANE
WESTPORT, CONNECTICUT
FEBRUARY 4, 2020 SCALE: 1"=60'
SHEET 1 OF 1

DATE	REVISION

DYMAR
800 Main Street South · Southbury, Ct. · 06488–2210 · (203) 267–1046 · Fax (203) 267–1547
ENGINEERING · PLANNING · SURVEYING · DEVELOPMENT SERVICES

FIELD BOOK NO.	81	PROJECT NO.	0934

F:\0934 - Bayberry Lane-Westport\Survey\A-2-Ex Conditions.dwg, Map, 5/13/2020 12:22:12 PM, gemos, AutoCAD PDF (Web and Mobile).pc3, ARCH full bleed D (24.00 x 36.00 Inches), 1:1

GENERAL LEGEND

PLAN SYMBOLS

DESCRIPTION	EXISTING	PROPOSED
PROPERTY LINE & IRON PIN		
PROPERTY LINE & MONUMENT		
SETBACK LINE		
BENCHMARK	B.M.#	
GRID LINE & COORDINATE	E 000,000	
BASELINE POINT	STA. #00	
CENTERLINE		
CONTOUR & ELEVATION	100	100
SPOT ELEVATION	X 91.5	X 91.5
GRANITE CURBING		
CONCRETE CURBING		CONC. CURB
BITUMINOUS LIP CURBING		
EDGE OF ROAD (NO CURB)		
SIDEWALK		
WIRE FENCE		
RETAINING WALL		
STONE WALL		
WOOD PICKET FENCE		
CABLE GUIDE RAIL		
METAL BEAM RAIL		
BOX BEAM RAIL		
GUIDE POSTS		
EDGE OF WOODED AREA		
DECIDUOUS TREES		+
EVERGREEN TREES		+
EDGE OF WATER		
MARSH AREA		
WETLAND LINE		
ROCK OR ROCK OUTCROP		
BUILDINGS		F.F.=100.00
FORMER BUILDING		
RAILROAD TRACK		
LIGHT POLE		
UTILITY POLE		
HIGH TENSION TOWER		
TRAFFIC SIGNAL		
STREET MOUNTED SIGN		
POLICE OR FIRE CALL BOX		
SOIL BORING		
TEST HOLE & PERC TEST		P
WELL		
HYDRANT		
WATER MAIN, VALVE & MANHOLE	W	6"W
THRUST BLOCK		
GAS MAIN & GATE VALVE	4"G G.G.	4"G GV
OVERHEAD ELECTRIC	OVH	OVH
UNDERGROUND ELECTRIC	E	E
UNDERGROUND TELEPHONE	T	T
UNDERGROUND CABLE TV	CBL	CBL
SANITARY SEWER & M.H.	8"SAN	8"SAN SMH
UTILITY TO BE REMOVED		
STORM SEWER, CATCH BASIN AND M.H.	15" S.S.	CB DMH
FLARED END SECTION		
HEADWALL		
GUTTER (TYPE-BIT, CONC., RIPRAP)		
OPEN DITCH		
UNDER DRAIN		

PLAN SYMBOLS (CONTINUED)

DESCRIPTION	EXISTING	PROPOSED
HAY BALES		
SILT FENCE		
ROCK LINED SWALE		
UNLINED GRASS SWALE		
ECRM REVEGETATION SWALE		
ROADWAY WATER BREAK		
RIPRAP OUTLET SPLASH PAD		
ANTI-TRACKING PAD		
SEEPAGE ENVELOPE		
PLUNGE POOL		
SEED & MULCH STABILIZATION		
DRAIN INLET SILTSACK TRAP		
CHECK DAM		
CONSTRUCTION LIMIT LINE		

GENERAL NOTES

CONSTRUCTION

1. NOTES ARE NOT INTENDED TO REPLACE SPECIFICATIONS. REFER TO PROJECT SPECIFICATION AND STANDARD NOTES IN ADDITION TO GENERAL NOTES. WHERE LAWS AND REGULATIONS OF PUBLIC AUTHORITY PRESCRIBE A HIGHER DEGREE OF PROTECTION THAN SPECIFIED HEREIN, THEN THE HIGHER DEGREE SO PRESCRIBED SHALL GOVERN.

2. UNLESS OTHERWISE INDICATED, DETAILS SHOWN ON ANY DRAWINGS ARE TO BE CONSIDERED TYPICAL FOR ALL SIMILAR CONDITIONS.

3. THE WORD "CERTIFY" IS TO BE AN EXPRESSION OF PROFESSIONAL OPINION BY THE ENGINEER, BY WHICH IS BASED ON HIS\HER BEST KNOWLEDGE, INFORMATION AND BELIEF; AS SUCH IT CONSTITUTES NEITHER A GUARANTEE OR WARRANTY.

4. CHANGES MADE TO THESE PLANS AND RELATED CONTRACT DOCUMENTS SINCE COMPLETED BY DYMAR MAY BE DETERMINED BY COMPARISON WITH RECORD PLANS AND RELATED DOCUMENTS FILED AT THE OFFICE OF DYMAR.

5. THE INFORMATION SHOWN ON THE FOLLOWING SHEETS IS LIMITED TO THE INFORMATION MADE AVAILABLE AT THE TIME OF THE DESIGN SERVICES WERE RENDERED.

6. LOCATIONS OF EXISTING UTILITIES HAVE BEEN TAKEN FROM UTILITY MAPS OR BY OTHER MEANS. ACTUAL FIELD LOCATIONS AND ELEVATIONS ARE TO BE VERIFIED BY THE CONTRACTOR PRIOR TO CONSTRUCTION. ALL UTILITY COMPANIES AFFECTED BY THE WORK ON OR NEAR THE PROJECT AREA SHALL BE CONTACTED PRIOR TO COMMENCEMENT OF THE WORK.

7. ALL DIMENSIONS AND CONDITIONS MUST BE VERIFIED IN THE FIELD, AND DISCREPANCIES SHALL BE BROUGHT TO THE ATTENTION OF THE ENGINEER BEFORE PROCEEDING WITH THE AFFECTED PART OF THE WORK. THE ENGINEER SHALL HAVE FINAL SAY AS TO THE ACTUAL DIMENSIONS BY WHICH TO CONSTRUCT. NO ALLOWANCES SHALL BE MADE FOR DIFFERENCES BETWEEN ACTUAL MEASUREMENTS AND THOSE SHOWN ON THE DRAWINGS.

8. THE CONTRACTOR SHALL PROCURE ALL NECESSARY PERMITS AND LICENSES REQUIRED BY FEDERAL, STATE OR LOCAL AUTHORITIES TO PERFORM THE WORK, PAY ALL FEES IN CONNECTION THEREWITH, AND ABIDE BY ALL REGULATIONS, ORDINANCES, CODES AND OTHER RULES OF SUCH AUTHORITIES HAVING JURISDICTION.

9. THE CONTRACTOR SHALL STRICTLY COMPLY WITH THE NATIONAL FIRE CODES, SAFETY AND HEALTH REGULATIONS FOR CONSTRUCTION 29 USC SECTION 1926 AND THE OCCUPATIONAL HEALTH AND SAFETY ACT IN ORDER TO SAFELY AND ADEQUATELY PROTECT ALL EMPLOYEES AND PROPERTY DURING CONSTRUCTION.

10. THE CONSTRUCTION SITE MUST BE KEPT CLEAN AND ORDERLY, AND COMBUSTIBLES KEPT TO AN ABSOLUTE MINIMUM AT ALL TIMES. ALL RUBBISH AND COMBUSTIBLE DEBRIS MUST BE CONTINUOUSLY REMOVED FROM THE PROPERTY. FACILITIES FOR ADEQUATE FIRE PROTECTION MUST BE PROVIDED TO KEEP PACE WITH THE PROGRESS OF WORK REQUIRING THE USE OF COMBUSTIBLE MATERIALS. ALL CONTAINERS OF FLAMMABLE LIQUIDS MUST BE PROVIDED WITH APPROPRIATE WARNING LABELS AND DESCRIPTION OF THEIR CONTENTS.

11. AISLES, PASSAGEWAYS, ALLEYWAYS, DRIVEWAYS, ENTRANCES OR EXITS AND ACCESS TO FIRE EQUIPMENT MUST BE KEPT UNOBSTRUCTED AT ALL TIMES.

12. THE LOCAL FIRE AND POLICE DEPARTMENT SHALL BE PROMPTLY NOTIFIED OF ANY FIRE, EXPLOSION, LEAKAGE OR SPILLAGE OF FLAMMABLE LIQUIDS, REGARDLESS OF HOW SMALL IT MAY HAVE BEEN.

13. THE CONTRACTOR SHALL BE RESPONSIBLE FOR THE ACCURATE LAYOUT OF ALL CONSTRUCTION LIMIT LINES, EASEMENTS AND PROPERTY LINES WHERE REQUIRED, AND CONTINUING THE CONSTRUCTION ACTIVITIES WITHIN THESE LIMITS. HE IS ALSO REQUIRED TO HAVE A REGISTERED ENGINEER OR LAND SURVEYOR LAYOUT ALL ROADS, STORM DRAINAGE, AND SIDEWALKS. AS BUILTS SHALL BE PREPARED AND FURNISHED TO THE CONTROLING AUTHORITY FOR ALL ROADS, DRIVEWAYS, PARKING AREAS, STORMWATER SYSTEMS, AND SIDEWALKS.

14. SLOPES AND INVERTS OF ALL SANITARY PIPES ARE CRITICAL AND MUST BE CONSTRUCTED AS SHOWN.

15. HORIZONTAL LOCATIONS OF PROPOSED STORM SEWERS MAY BE VARIED SLIGHTLY IN THE FIELD TO FIT EXISTING CONDITIONS WHERE APPROVED BY THE ENGINEER.

16. MAINTAIN TEN FOOT (10") MINIMUM HORIZONTAL SEPARATION AND EIGHTEEN INCH (18") MINIMUM VERTICAL SEPARATION BETWEEN WATER MAINS AND SANITARY SEWERS OR STORM DRAINS. WHERE VERTICAL SEPARATION CAN NOT BE MAINTAINED A CONCRETE ENCASEMENT OR CRADLE SHALL BE CONSTRUCTED. REFER TO DETAILS FOR TYPE.

17. THE CONTRACTOR SHALL NOTIFY "CALL BEFORE YOU DIG" AT LEAST 72 HOURS PRIOR TO ANY EXCAVATION.

18. ALL EXISTING UTILITIES TO BE RELOCATED, RESET AND/OR RECONNECTED, IF IN CONFLICT WITH THE PROPOSED WORK ACTIVITIES, SHALL BE MADE AT NO DIRECT PAYMENT TO THE CONTRACTOR BUT SHALL BE INCLUDED IN VARIOUS ITEMS OF WORK UNDER THE CONTRACT.

19. WHERE EXISTING UTILITY POLES NEED TO BE RELOCATED OR REMOVED BY OTHERS, SUCH WORK SHALL BE AT THE CONTRACTOR'S EXPENSE UNLESS OTHERWISE SPECIFIED BY THE OWNER OR INDICATED ELSEWHERE. THE RELOCATION OF SAME OR REMOVAL THEREOF MAY NOT COINCIDE WITH THE CONTRACTOR'S WORK SCHEDULE AND, THEREFORE, THE CONTRACTOR SHOULD ANTICIPATE IN HIS BID THE COST OF SUCH WORK WITHIN THE PROJECTS LIMITS TO PROJECT COMPLETION.

20. ALL UTILITY LINES DAMAGED BY CONSTRUCTION SHALL BE BROUGHT TO THE ATTENTION OF THE PERTINENT UTILITY COMPANY IMMEDIATELY. COST OF WORK TO REPAIR THE UTILITY SHALL BE BORNE BY THE CONTRACTOR, UNLESS OTHERWISE ACCEPTED UNDER OTHER TERMS BY THE UTILITY IN AGREEMENT FORM.

21. ALL EXISTING WATER, STORM OR SANITARY SEWER LINES NOTED TO BE ABANDONED ARE TO BE EITHER REMOVED OR SAND FILLED AND PLUGGED AS BY DIRECTED BY THE ENGINEER AT NO ADDITIONAL EXPENSE TO THE OWNER. REUSE OF EXISTING PIPE AND STRUCTURES MUST BE APPROVED BY THE DESIGN ENGINEER AND TOWN'S CONTROLLING AUTHORITY . DISPOSAL OF UNAPPROVED MATERIAL SHALL BE AT THE CONTRACTOR'S EXPENSE.

22. ALL UTILITIES SHALL BE INSTALLED UNDERGROUND IN ACCORDANCE WITH THE STANDARD PRACTICES OF THE STATE, COUNTY OR LOCAL AGENCY HAVING JURISDICTION OVER THE MINIMUM REQUIREMENTS OF THE PROJECT, UNLESS OTHERWISE INDICATED ON THE DRAWING.

23. ALL FILL REQUIRED UNDER UTILITY LINES FOR BELOW GRADE EXCAVATIONS, SHALL BE SELECT GRANULAR MATERIAL PLACED IN TWELVE INCH (12") LIFTS AND PROPERLY COMPACTED TO 95% OF OPTIMUM DRY DENSITY.

24. PROVIDE WELL-BRACED SHORING AT EXCAVATIONS NEAR EXISTING STRUCTURES TO PREVENT DISPLACEMENT OR SETTLEMENT. ANY DAMAGES BORNE BY THE CONTRACTOR SHALL BE BROUGHT TO THE OWNERS ATTENTION AND REPAIRED AT THE CONTRACTOR'S OWN EXPENSE.

25. BELOW GRADE PRECAST STRUCTURES ARE TO BE CONSTRUCTED TO RESIST HYDROSTATIC UPLIFT BASED ON TOTAL COMPLETION OF THESE STRUCTURES INCLUDING PLACEMENT OF ALL BACKFILL. THE CONTRACTOR SHALL BE RESPONSIBLE TO MAINTAIN GROUNDWATER LEVELS BELOW LOWEST REQUIRED EXCAVATION UNTIL SATISFACTORY COMPLETION OF REQUIRED CONSTRUCTION.

26. PROVIDE SIX INCH (6") MINIMUM OF CRUSHED STONE OR PIPE BEDDING IN EARTH UNDER ALL STRUCTURES, INCLUDING MANHOLES, DRAINAGE STRUCTURES AND RETAINING WALLS, UNLESS DIRECTED BY THE ENGINEER OR AS DETAILED ELSEWHERE IN THE DRAWINGS.

27. THE CONTRACTOR SHALL PROPERLY PROTECT ADJOINING PROPERTY OUTSIDE THE PROJECT LIMITS FROM DAMAGE. ANY DAMAGE TO THE SAME SHALL BE SUBJECT TO REPAIRS BY THE CONTRACTOR WITHOUT COST TO THE OWNER

CONSTRUCTION – CONT'D

28. ALL DRIVEWAYS, ROADS, SIDEWALK AND YARD AREAS DISTURBED BY CONSTRUCTION IN OR OUTSIDE THE PROJECT AREA SHALL BE RETURNED TO THEIR ORIGINAL CONDITION OR BETTER, AND SHALL BE GRADED TO MEET PROPOSED FINISHED GRADES. GRASSED AREAS DISTURBED BY CONSTRUCTION SHALL BE LOAMED, FERTILIZED AND SEEDED OR SODDED, AS IT APPLIES.

29. THE CONTRACTOR SHALL BE COMPLETELY RESPONSIBLE FOR UNDERTAKING ALL MEASURES NECESSARY TO PREVENT EROSION AND SILTATION, REGARDLESS OF THE METHOD USED IN ACCORDANCE WITH THE APPLICABLE LOCAL, COUNTY, AND STATE GUIDELINES. AT A MINIMUM, INSPECTIONS OF THE SITE BY A QUALIFIED INDIVIDUAL SHALL BE DONE WEEKLY AND WITHIN 24 HOURS OF ANY STORM EVENT GREATER THAN 1/2 INCH OF RAIN. PROPER ADJUSTMENTS AND MEASURES SHALL BE MADE AND REPORTS PREPARED AND KEPT ON SITE WITH A SOIL AND EROSION CONTROL PLAN PREPARED BY A REGISTERED ENGINEER. WETLAND AND WATER COURSE ELEVATIONS SHALL BE RESTORED AND CHANNELS CLEANED AND CLEARED OF CONSTRUCTION DEBRIS AND EXCESS EXCAVATED SEDIMENT THROUGHOUT THE PROJECT. ALL AFFECTED AREAS SHALL BE RESTORED TO THEIR ORIGINAL CONDITION. PENALTIES IMPOSED BY AGENCIES HAVING JURISDICTION SHALL BE BORNE BY THE CONTRACTOR.

30. THE CONTRACTOR SHALL TAKE SPECIAL CAUTION TO PRESERVE AND PROTECT FROM INJURY ALL TREES AND VEGETATION LOCATED WITHIN WETLANDS AND AS INDICATED TO REMAIN. NO UNNECESSARY CUTTING OR TRIMMING OF TREES WILL BE PERMITTED, UNLESS AUTHORIZED BY THE OWNER.

31. THE CONTRACTOR IS FURTHER RESTRICTED FROM CAUSING ANY UNNECESSARY EXCAVATIONS WITHIN THE DESIGNATED WETLAND AREA AND UNDER NO CIRCUMSTANCES SHALL THE WETLAND SOILS BE REMOVED FROM THE SITE UNLESS OTHERWISE PERMITTED OR DIRECTED BY THE OWNER OR IT'S AUTHORIZED AGENT.

32. ALL CONSTRUCTION MATERIALS, PRACTICES AND PROCEDURES SHALL CONFORM TO THE MUNICIPALITY'S CONSTRUCTION STANDARDS FOR STREETS, HIGHWAYS, DRIVEWAYS AND UTILITIES AS LAST AMENDED AND WHERE THE MUNICIPALITY'S REGULATION IS SILENT, THE FOLLOWING REFERENCE MANUALS SHALL GOVERN AS THE "STANDARD" SPECIFICATION FOR THE PROJECT, LATEST REVISED EDITION:

A.) STATE OF CONNECTICUT DEPARTMENT OF TRANSPORTATION STANDARD SPECIFICATIONS FOR ROADS, BRIDGES AND INCIDENTAL CONSTRUCTION – FORM 816, AS AMENDED TO DATE.

B.) STATE OF CONNECTICUT GUIDELINES FOR SOIL EROSION AND SEDIMENT CONTROL 2002, AS AMENDED TO DATE.

C.) CONNECTICUT DEPARTMENT OF TRANSPORTATION DRAINAGE MANUAL – 2000, AS AMENDED TO DATE.

D.) CONNECTICUT DEPARTMENT OF ENERGY AND ENVIRONMENTAL PROTECTION CONNECTICUT STORMWATER QUALITY MANUAL – 2004, AS AMENDED TO DATE.

E.) CONN. DEEP GUIDANCE DOCUMENTS FOR LARGE-SCALE ON-SITE WASTERWATER RENOVATION SYSTEMS, FEBRUARY, 2006.

PROJECT RELATED

1. TOTAL AREA OF PARCELS = 23 ACRES +/-.

2. THE PROPERTY IS ZONED AAA; PROPOSAL IS FOR AN "OPEN SPACE SUBDIVISION" UNDER SECTION 5.8 OF THE ZONING REGULATIONS.

3. PARCELS ARE LOCATED IN ZONE X (AREA OF MINIMAL FLOOD HAZARD), AS SHOWN ON THE FEDERAL FLOOD INSURANCE RATE MAP NO. 09001C0412F, DATED JUNE 18, 2010.

4. THE CONTOURS AND TOPOGRAPHIC FEATURES SHOWN ARE FROM AN AERIAL SURVEY PREPARED BY GOLDEN AERIAL SURVEYS, NEWTOWN, CT. VERTICAL DATUM IS NAVD 1988.

5. ALL PROPOSED UTILITIES ON-SITE SHALL BE INSTALLED UNDERGROUND.

6. ALL CONSTRUCTION MATERIALS, PRACTICES AND PROCEDURES SHALL CONFORM TO THE TOWN OF WESTPORT ZONING REGULATIONS.

7. TOWN OF WESTPORT MAP – G13; LOTS – 20 & 21

8. THE INLAND WETLANDS SHOWN WERE FLAGGED IN THE FIELD BY CHRISTOPHER P. ALLAN, RPSS, OF LAND-TECH CONSULTANTS, INC., WESTPORT, CT ON SEPTEMBER 29, 2016 AND FIELD REVIEWED BY CHRISTOPHER P. ALLAN, RPSS AND JAY FAIN, RPSS ON JANAURY 28, 2020. THE WETLAND FLAGGING WAS FIELD LOCATED BY DENNIS A. DEILUS-LAND SURVEYORS IN 2016. THE WETLAND FLAGGING WAS CHECKED IN THE FIELD BY DYMAR ON JANUARY 27, 2020.

ABBREVIATIONS

ACQ"D.	ACQUIRED
APPROX.	APPROXIMATE
ARCH.	ARCHITECT
ACCMP.	ASPHALT COATED CORRUGATED METAL PIPE
B.L.	BASE LINE
B.M.	BENCH MARK
BIT.	BITUMINOUS
B.C.L.C.	BITUMINOUS CONCRETE LIP CURBING
B.	BORING
B.B.	BOTTOM OF BANK
BDRY.	BOUNDARY
C.I.P.	CAST IRON PIPE
C.B.	CATCH BASIN
CTR.	CENTER
C.C.	CENTER TO CENTER
CL	CENTER LINE
CH	CHORD
CH.B.	CHORD BEARING
CONC.	CONCRETE
CONST.	CONSTRUCT
CTR. LN.	CONTOUR LINE
CT.	CONTRACT
C.M.P.	CORRUGATED METAL PIPE
C.P.P.	CORRUGATED PLASTIC PIPE
CULV.	CULVERT
CO.	COUNTY
△	DELTA
D.O.T.	DEPARTMENT OF TRANSPORTATION
DIA.	DIAMETER
D.B.	DISTRIBUTION BOX
D.C.P.C.	DOWELED CONCRETE PARK CURBING
DMH	DRAIN MANHOLE
D.H.	DRILL HOLE
DR.	DRIVE OR DRIVEWAY
D.I.	DROP INLET
D.I.P.	DUCTILE IRON PIPE
ESMT.	EASEMENT
E.	EAST
E.B.	EAST BOUND
E.O.R.	EDGE OF ROAD
E.O.W.	EDGE OF WATER
ELEC.	ELECTRIC
EL.	ELEVATION
E.W.	END WALL
E.S.	END SECTION
ENG.	ENGINEER
EVGN.	EVERGREEN
EX.	EXISTING
F.B.	FIRE BOX
F.E.	FLARED END
FLR.	FLOOR
FT.	FOOT OR FEET
FND.	FOUNDATION
FR.	FRAME
GALY	GALLEY
G.P.D.	GALLONS PER DAY
GAL.I.	GALVANIZED IRON
GAR.	GARAGE
G.G.	GAS GATE
GRAV.	GRAVEL
G.S.C.	GRANITE SLOPE CURBING
G.ST.C.	GRANITE STONE CURBING
G.P.S.	GROSS PARTICLE SEPARATOR
GRD.	GROUND
GD. RL.	GUIDE RAIL
H.B.	HAY BALE
H.W.	HEADWALL
HGT.	HEIGHT
HEM.	HEMLOCK
HICK.	HICKORY
HWY.	HIGHWAY
HWY. MON.	HIGHWAY MONUMENT
HORZ.	HORIZONTAL
HO.	HOUSE
H.R.	HANDICAP RAMP
HYD.	HYDRANT
IN.	INCH OR INCHES
I.F.O.C.	INSIDE FACE OF CURB
I.P.	IRON PIPE
INV.	INVERT
LT.	LEFT
L.	LENGTH
L.V.C.	LENGTH OF VERTICAL CURVE
LIM.	LIMIT
L.F.	LINEAR FEET
MAC.	MACADAM
M.B.	MAIL BOX
M.H.	MANHOLE
MPL.	MAPLE
MAX.	MAXIMUM
M.H.W.	MEAN HIGH WATER
M.J.	MECHANICAL JOINT
M.B.R.	METAL BEAM RAIL
MIN.	MINIMUM
MISC.	MISCELLANEOUS
MON.	MONUMENT
N.	NORTH
N.B.	NORTH BOUND
NO., #	NUMBER
O.T.	OIL TRAP
P	PERCOLATION TEST
P.E.	PERMANENT EASEMENT
P.C.C.	POINT OF COMPOUND CURVATURE
P.C.	POINT OF CURVATURE
P.I.	POINT OF INTERSECTION
P.T.	POINT OF TANGENCY
P.R.C.	POINT OF REVERSE CURVATURE
P.V.C.C.	POINT OF VERTICAL COMPOUND CURVATURE
P.V.C.	POINT OF VERTICAL CURVATURE
P.V.I.	POINT OF VERTICAL INTERSECTION
P.V.R.C.	POINT OF VERTICAL REVERSE CURVATURE
P.V.T.	POINT OF VERTICAL TANGENCY
P.O.C.	POINT ON CURVATURE
P.O.T.	POINT ON TANGENT
P.V.C.	POLYVINYL CHLORIDE PIPE
PD	POND
PROJ.	PROJECT
PL	PROPERTY LINE
PROP.	PROPOSED
PUB. UTL.	PUBLIC UTILITY
P.B.	PULL BOX
P.S.	PUMP STATION
R.	RADIUS
R.R.	RAILROAD
REINF.	REINFORCED
R.C.P.	REINFORCED CONCRETE PIPE
RELOC.	RELOCATED OR RELOCATION
REQ'D.	REQUIRED
RET.	RETAINING
R.W.	RETAINING WALL
RT/	RIGHT
R.O.W.	RIGHT OF WAY
RD.	ROAD
RWY.	ROADWAY
R.D.	ROOF DRAIN
SAN.	SANITARY
S.M.H.	SANITARY MANHOLE
SECT.	SECTION
S.T.	SEPTIC TANK
SHLD.	SHOULDER
S.W.	SIDEWALK
S.F.	SILT FENCE
S.	SOUTH OR SLOPE
S.B.	SOUTH BOUND
SPEC.	SPECIFICATION
SPK.	SPIKE
SP. ELEV.	SPOT ELEVATION
STK.	STAKE
STD.	STANDARD
STA.	STATION
ST. W.	STONE WALL
S.S.	STORM DRAIN OR SEWER
STY.	STORY
ST.	STREET
S.L.J.	SUPER LOCK JOINT
SYC.	SYCAMORE
TAN.	TANGENT
TEL.	TELEPHONE
T.CTV	TELEPHONE & CABLE TV
TEMP.	TEMPORARY
T.E.	TEMPORARY EASEMENT
T.H.	TEST HOLE
T.C.G.R.	THREE CABLE GUIDE RAILING
TMBR.	TIMBER
T.S.	TOE OF SLOPE
T.B.	TOP OF BANK
T.F.	TOP OF FRAME
T.G.	TOP OF GRATE
TRANS.	TRANSITION
T.P.	TRAVERSE POINT
TW.	TWIN
TW. C.G.R.	TWO CABLE GUIDE RAILING
U.D.	UNDER DRAIN
V.I.F.	VERIFY IN FIELD
VERT.	VERTICAL
V.C.	VERTICAL CURVE
V.C.P.	VITRIFIED CLAY PIPE
W.BK.	WATER BREAK
W.G.	WATER GATE
W.M.	WATER MAIN
W.S.E.	WATER SURFACE ELEVATION
W.	WEST
W.B.	WEST BOUND
WL.	WETLAND
W.W.	WINGWALL
W.R.R.	WIRE ROPE RAILING
W/	WITH
W/O	WITHOUT
WD.	WOOD
W.I.	WROUGHT IRON
YD.	YARD
Y.D.	YARD DRAIN

REVISION				
NO.	DATE	DESCRIPTION	DRAWN BY	CHECKED BY

COPYRIGHT © 2020 THESE PLANS ARE THE PROPERTY OF DYMAR, PREPARED AS AN INSTRUMENT OF SERVICE FOR USE ON THE PROJECT DESCRIBED HEREIN. THEY MAY NOT BE USED FOR OTHER PROJECTS OR EXTENSIONS OF THE PROJECT. DYMAR DOES NOT GUARANTEE THESE PLANS TO REFLECT THE TRUE CONDITIONS. THE CONTRACTOR SHALL VERIFY ALL FIELD CONDITIONS AND DIMENSIONS AND IS RESPONSIBLE FOR NOTIFYING DYMAR IF A DISCREPANCY EXISTS. THERE AFTER DYMAR SHALL HAVE FINAL SAY.

DYMAR
800 Main Street South · Southbury, Ct. 06488 · (203) 267-1046 · Fax (203) 267-1547
ENGINEERING · PLANNING · SURVEYING · DEVELOPMENT SERVICES

DRAWINGS TO BE USED FOR LAND USE SUBMISSIONS ONLY
NOT FOR CONSTRUCTION

CLIENT: Estate of Dina M. & James S. Belta
128 Bayberry Lane
Westport, Connecticut 06880

PROJECT: Open Space Residential Subdivision
128 Bayberry Lane
Westport, Connecticut 06880

TITLE: General Legend, Abbreviations, & Notes

NOT VALID WITHOUT SIGNATURE AND ORIGINAL SEAL

MARK E. LANCOR, P.E. #12369

DATE:	05/14/2020
SCALE:	NO SCALE
DESIGNED BY:	M.E.L.
DRAWN BY:	C.B.B.
CHECKED BY:	M.E.L.
JOB NO.:	00934
DRAWING NO.:	C-1

F:\00934 - Bayberry Lane-Westport\Civil\Dwg\001.dwg, C1, 5/13/2020 12:22:14 PM, genus, AutoCAD PDF (Web and Mobile).pc3, ARCH full bleed D (24.00 x 36.00 Inches), 1:1

SOIL CLASSIFICATION

NUMBER	DESCRIPTION
3	RIDGEBURY, LEICSTER, AND WHITMAN SOILS, EXTREMELY ROCKY
17	TIMAKWA AND NATCHAUG SOILS
45A	WOODBRIDGE FINE SANDY LOAM, 0 TO 3 PERCENT SLOPE
73C	CHARLTON–CHATFIELD COMPLEX, 3 TO 15 PERCENT SLOPES, VERY ROCKY
73E	CHARLTON–CHATFIELD COMPLEX, 15 TO 45 PERCENT SLOPES, VERY ROCKY
84B	PAXTON AND MONTAUK FINE SANDY LOAMS, 3 TO 8 PERCENT SLOPES
103	RIPPOWAM FINE SANDY LOAM

LEGEND

WETLANDS	3.45 AC±
50' WETLANDS SETBACK LINE	
STEEP SLOPES	0.40 AC±
SOIL STOCKPILES	0.86 AC±
EXISTING HOUSES	0.13 AC±
EXISTING FARM STRUCTURES	0.55 AC±
EXISTING EQUIPMENT/FARM DEBRIS BURY AREA	0.36 AC±
NON–NATIVE INVASIVE PLANT SPECIES	0.75 AC±

REVISION			
NO.	DATE	DESCRIPTION	DRAWN BY	CHECKED BY

COPYRIGHT © 2020: THESE PLANS ARE THE PROPERTY OF DYMAR, PREPARED AS AN INSTRUMENT OF SERVICE. THEY MAY NOT BE REPRODUCED, PUBLISHED OR USED IN WHOLE OR IN PART WITHOUT THE WRITTEN CONSENT OF DYMAR. PROJECT: DYMAR DOES NOT GUARANTEE THESE PLANS TO REFLECT THE TRUE CONDITIONS. THE CONTRACTOR SHALL VERIFY ALL FIELD CONDITIONS AND DIMENSIONS AND IS RESPONSIBLE FOR NOTIFYING DYMAR IF A DISCREPANCY EXISTS. THERE AFTER, DYMAR SHALL HAVE FINAL SAY.

DYMAR
800 Main Street South · Southbury, Ct. 06488 · (203) 267-1046 · Fax (203) 267-1547
ENGINEERING · PLANNING · SURVEYING · DEVELOPMENT SERVICES

DRAWINGS TO BE USED FOR LAND USE SUBMISSIONS ONLY
NOT FOR CONSTRUCTION

CLIENT: Estate of Dina M. & James S. Belta
128 Bayberry Lane
Westport, Connecticut 06880

PROJECT: Open Space Residential Subdivision
128 Bayberry Lane
Westport, Connecticut 06880

TITLE: Existing Conditions Site Analysis Map

NOT VALID WITHOUT SIGNATURE AND ORIGINAL SEAL

MARK E. LANCOR, P.E. #12369

DATE:	05/14/2020
SCALE:	1"=60'
DESIGNED BY:	M.E.L.
DRAWN BY:	C.B.B.
CHECKED BY:	M.E.L.
JOB NO.:	00934
DRAWING NO.:	C-2

F:\00934 - Bayberry Lane-Westport\Civil\Dwg\002.dwg, C2, 5/13/2020 12:22:16 PM, genus, AutoCAD PDF (Web and Mobile).pc3, ARCH full bleed D (24.00 x 36.00 Inches), 1:1

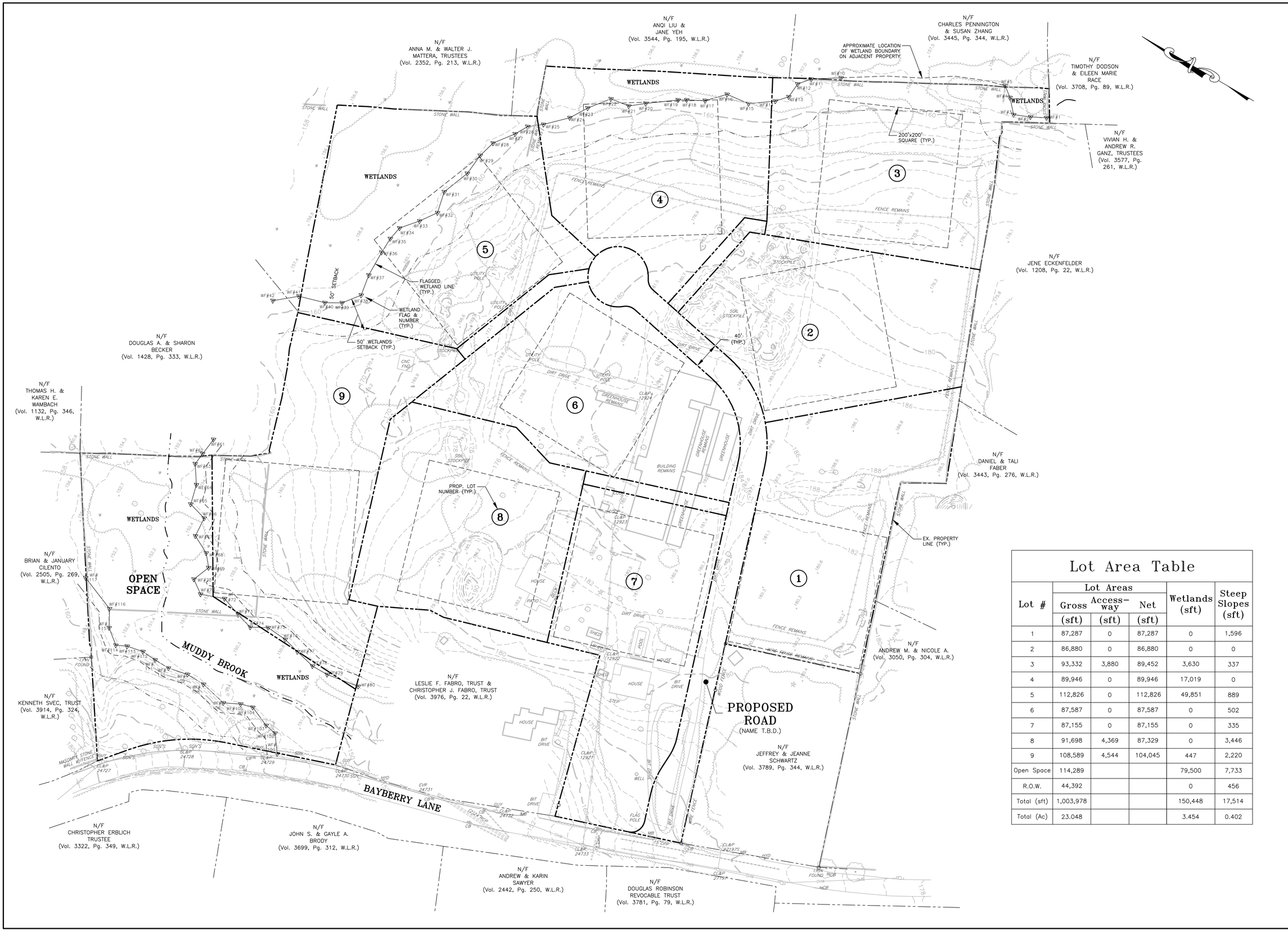

Lot Area Table

Lot #	Lot Areas			Wetlands (sft)	Steep Slopes (sft)
	Gross (sft)	Access-way (sft)	Net (sft)		
1	87,287	0	87,287	0	1,596
2	86,880	0	86,880	0	0
3	93,332	3,880	89,452	3,630	337
4	89,946	0	89,946	17,019	0
5	112,826	0	112,826	49,851	889
6	87,587	0	87,587	0	502
7	87,155	0	87,155	0	335
8	91,698	4,369	87,329	0	3,446
9	108,589	4,544	104,045	447	2,220
Open Space	114,289			79,500	7,733
R.O.W.	44,392			0	456
Total (sft)	1,003,978			150,448	17,514
Total (Ac)	23.048			3.454	0.402

REVISION

NO.	DATE	DESCRIPTION	DRAWN BY	CHECKED BY

COPYRIGHT © 2020 THESE PLANS ARE THE PROPERTY OF DYMAR, PREPARED AS AN INSTRUMENT OF SERVICE. THIS PROPOSAL HAS BEEN PREPARED BASED ON INFORMATION PROVIDED BY OTHERS AT THE TIME OF THIS PROJECT. DYMAR DOES NOT GUARANTEE THESE PLANS TO REFLECT THE TRUE CONDITIONS. THE CONTRACTOR SHALL VERIFY ALL FIELD CONDITIONS AND DIMENSIONS AND IS RESPONSIBLE FOR NOTIFYING DYMAR IF A DISCREPANCY EXISTS. THERE AFTER, DYMAR SHALL WAIVE TRIAL BY.

DYMAR
800 Main Street South · Southbury, Ct. 06488 · (203) 267-1046 · Fax (203) 267-1547
ENGINEERING · PLANNING · SURVEYING · DEVELOPMENT SERVICES

DRAWINGS TO BE USED FOR LAND USE SUBMISSIONS ONLY
NOT FOR CONSTRUCTION

CLIENT: Estate of Dina M. & James S. Belta
128 Bayberry Lane
Westport, Connecticut 06880

PROJECT: Open Space Residential Subdivision
128 Bayberry Lane
Westport, Connecticut 06880

TITLE: Existing Conditions Map – Conventional Lot Layout Plan

NOT VALID WITHOUT SIGNATURE AND ORIGINAL SEAL

MARK E. LANCOR, P.E. #12369

1 2

DATE:	05/14/2020
SCALE:	1"=60'
DESIGNED BY:	M.E.L.
DRAWN BY:	C.B.B.
CHECKED BY:	M.E.L.
JOB NO.:	00934
DRAWING NO.:	C-3

F:\00934 - Bayberry Lane-Westport\Civil\Dwg\003.dwg, C3, 5/13/2020 12:22:18 PM, genus, AutoCAD PDF (Web and Mobile).pc3, ARCH full bleed D (24.00 x 36.00 Inches), 1:1

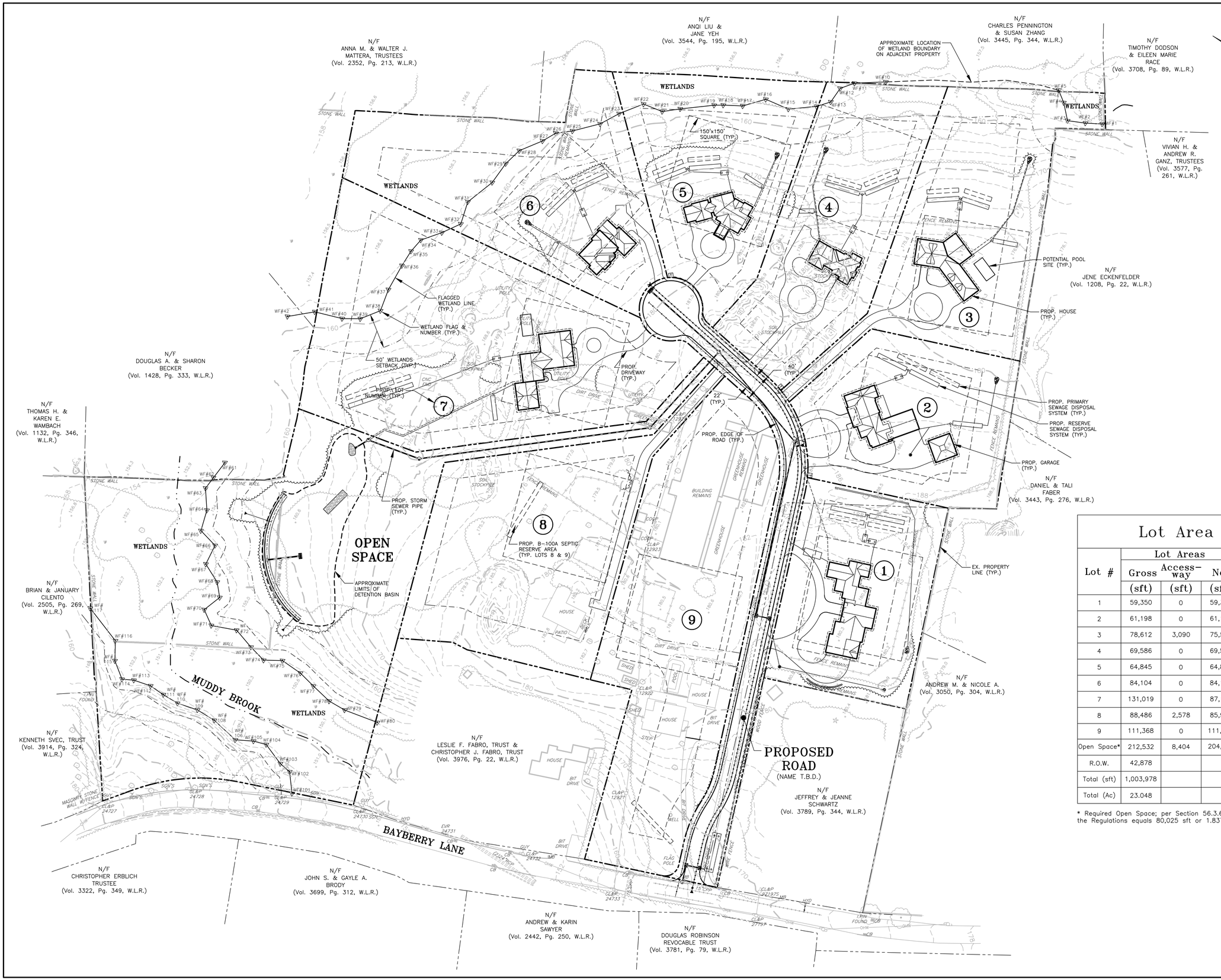

Lot Area Table

Lot #	Lot Areas Gross (sft)	Lot Areas Access-way (sft)	Lot Areas Net (sft)	Wetlands (sft)	Steep Slopes (sft)
1	59,350	0	59,350	0	1596
2	61,198	0	61,198	0	–
3	78,612	3,090	75,522	2,497	337
4	69,586	0	69,586	684	–
5	64,845	0	64,845	12,236	–
6	84,104	0	84,104	35,410	160
7	131,019	0	87,173	19,674	1345
8	88,486	2,578	85,908	0	3446
9	111,368	0	111,368	0	335
Open Space*	212,532	8,404	204,128	79,947	9,839
R.O.W.	42,878			0	456
Total (sft)	1,003,978			150,448	17,514
Total (Ac)	23.048			3.454	0.402

* Required Open Space; per Section 56.3.6 of the Regulations equals 80,025 sft or 1.837 Ac

REVISION

NO.	DATE	DESCRIPTION	DRAWN BY	CHECKED BY

COPYRIGHT © 2020 THESE PLANS ARE THE PROPERTY OF DYMAR, PREPARED AS AN INSTRUMENT OF SERVICE. THIS PROPOSAL HAS BEEN PREPARED BASED ON INFORMATION PROVIDED BY OTHERS AT THE TIME OF THIS PROJECT. DYMAR DOES NOT GUARANTEE THESE PLANS TO REFLECT THE TRUE CONDITIONS. THE CONTRACTOR SHALL VERIFY ALL FIELD CONDITIONS AND DIMENSIONS AND IS RESPONSIBLE FOR NOTIFYING DYMAR IF A DISCREPANCY EXISTS. THERE AFTER, DYMAR SHALL HAVE FINAL SAY.

DYMAR
800 Main Street South · Southbury, Ct. 06488 · (203) 267-1046 · Fax (203) 267-1547
ENGINEERING · PLANNING · SURVEYING · DEVELOPMENT SERVICES

DRAWINGS TO BE USED FOR LAND USE SUBMISSIONS ONLY
NOT FOR CONSTRUCTION

CLIENT: Estate of Dina M. & James S. Belta
128 Bayberry Lane
Westport, Connecticut 06880

PROJECT: Open Space Residential Subdivision
128 Bayberry Lane
Westport, Connecticut 06880

TITLE: Existing Conditions Map – Cluster Lot Layout Plan

NOT VALID WITHOUT SIGNATURE AND ORIGINAL SEAL

MARK E. LANCOR, P.E. #12369

DATE:	05/14/2020
SCALE:	1"=60'
DESIGNED BY:	M.E.L.
DRAWN BY:	C.B.B.
CHECKED BY:	M.E.L.
JOB NO:	00934
DRAWING NO:	C-4

F:\00934 - Bayberry Lane-Westport\Civil\Dwg\004.dwg, 4, 5/13/2020 12:22:21 PM, gensus, AutoCAD PDF (Web and Mobile).pc3, ARCH full bleed D (24.00 x 36.00 Inches), 1:1

MATCH LINE – SEE SHEET C-5B

N/F DOUGLAS A. & SHARON BECKER

PROP. PLUNGE POOL

DMH #1

DMH #2

PROP. FE#1 INV=159.00'

PROP. FOREBAY

APPROX. LIMITS OF ARMORMAX TURF REINFORCEMENT MAT (TYP.)

PROP. SEEPAGE ENVELOPE

OPEN SPACE

PROP. FE#2 INV=155.50'

UPLANDS REVIEW AREA, IMPACT 500 SFT±

PROP. 18"x24" ECCENTRIC TEE MANIFOLD, INV=156.50'

PROP. DETENTION BASIN

OCS#1
TF=162.00'
12" ORIFICE INV IN=157.0'
18" CPP INV OUT=157.0'
SEE DETAIL

SEE SHEET C-8C FOR CROSS SECTION

BERM EL.@156.0

FLOW DISSAPPATOR STRIP

CONC. WEIR LEVEL SPREADER EL.@158.0 (SEE DETAIL)

BIOSWALE

UPLANDS REVIEW AREA, IMPACT 311 SFT±

WETLANDS

FLAGGED WETLAND LINE (TYP.)

50' WETLANDS SETBACK (TYP.)

WETLAND FLAG & NUMBER (TYP.)

PROP. FE#3 INV=155.50'

WPLO. 15' SETBACK (TYP.)

MUDDY BROOK

N/F LESLIE F. FABRO, TRUST & CHRISTOPHER J. FABRO, TRUST

PROP. STORM SEWER PIPE (TYP.)

PROP. RESERVE SEWAGE DISPOSAL SYSTEM (B-100A)

8

9

PROP. STORM SEWER MANHOLE

PROP. PROPERTY LINE (TYP.)

150'x150' SQUARE (TYP.)

PROPOSED ACCESS DRIVEWAY (SEE NOTE #1)

PROP. STORMWATER INFILATRATION TRENCH (TYP.) (SEE SCHEDULE, SHEET C-5B)

PROP. STORM SEWER CATCH BASIN

OLD LOT LINE

PROP. YARD DRAIN TF=180.0'± INV=176.5'

PROP. 2'H± RETAINING WALL

PROP. GAS LINE, SIZE I.B.D. (TYP.)

PROP. 8" D.I.P. WATER LINE (TYP.)

PROPOSED ROAD (NAME T.B.D.)

PROP. INSPECTION PORT (TYP. OF 4)

PROP. 120 LF OF CULTEC RECHARGER, SEE DETAIL

PROP. TAPPING SLEEVE & VALVE

N/F JEFFREY & JEANNE SCHWARTZ

N/F ANDREW M. & NICOLE A. LASKIN

N/F DANIEL & TALI FABER

EX. PERC TEST LOCATION (TYP.)

PROP. DRIVEWAY (TYP.)

PROP. UNDERDRAIN

PROP. YARD DRAIN TF=186.0±

PROP. GARAGE

EX. TEST HOLE (TYP.)

PROP. LOT NUMBER (TYP.)

PROP. PRIMARY SEWAGE DISPOSAL SYSTEM (TYP.)

PROP. RESERVE SEWAGE DISPOSAL SYSTEM

PROP. PUMP STATION

PROP. SEPTIC TANK

PROP. 4" TIGHT PIPE

EX. PROPERTY LINE (TYP.)

PROP. HOUSE (TYP.)

POTENTIAL RAIN GARDEN, SEE TYPICAL DETAIL 329B C-8B

PROP. FOOTING DRAIN (TYP.)

PROP. YARD DRAIN TF=179.8'± INV=177.3'±

SLOPE TO DRAIN

N/F CHRISTOPHER ERBLICH TRUSTEE

N/F JOHN S. & GAYLE A. BRODY

N/F ANDREW & KARIN SAWYER

N/F DOUGLAS ROBINSON REVOCABLE TRUST

BAYBERRY LANE

APPROX. LIMITS OF PERMANENT PAVEMENT PATCH, MILL & OVERLAY 10' EITHER SIDE OF UTILITY. COORD. WITH DPW/ENGINEERING OFFICE FOR FINAL LIMITS & SPECIFICATIONS.

FOUNDATION ELEVATION SCHEDULE			
SUBDIVISION LOT NO.	FINISHED FLOOR ELEV. (FT)	BASEMENT FLOOR ELEV. (FT)	FTNG. DRAIN INVERT (FT)
1	185.5	176.5	175.5
2	188.5	179.5	178.5
3	180.5	171.5	170.5
4	182.0	173.0	172.0
5	180.5	171.5	170.5
6	180.0	171.0	170.0
7	178.0	169.0	168.0

KEY PLAN
SCALE:1"=500'

LEGEND:
- PROP. STORM MANHOLES
- PROP. CATCH BASINS
- PROP. YARD DRAINS
- PROP. GAS VALVE
- PROP. WATER VALVE
- PROP. TRANSFORMER PAD
- PROPOSED PRIMARY SEPTIC TRENCH
- PROPOSED RESERVE SEPTIC TRENCH

NOTE:
1. THE CONTRACTOR SHALL NOTIFY "CALL BEFORE YOU DIG" AT LEAST 72 HOURS PRIOR TO THE START OF EXCAVATION, BY CALLING 1-800-922-4455.

REVISION			
NO.	DATE	DESCRIPTION	CHECKED BY

COPYRIGHT © 2020 THESE PLANS ARE THE PROPERTY OF DYMAR, PREPARED AS AN INSTRUMENT OF SERVICE. THEY MAY NOT BE USED FOR ANY PURPOSE NOT SPECIFICALLY AGREED TO IN WRITING BY DYMAR. THESE PLANS DO NOT GUARANTEE THE TRUE CONDITIONS. THE CONTRACTOR SHALL VERIFY ALL FIELD CONDITIONS AND DIMENSIONS AND IS RESPONSIBLE FOR NOTIFYING DYMAR IF A DISCREPANCY EXISTS. THERE AFTER, DYMAR SHALL HAVE FINAL SAY.

DYMAR
800 Main Street South · Southbury, Ct. 06488 · (203) 267-1046 · Fax (203) 267-1547
ENGINEERING · PLANNING · SURVEYING · DEVELOPMENT SERVICES

DRAWINGS TO BE USED FOR LAND USE SUBMISSIONS ONLY
NOT FOR CONSTRUCTION

CLIENT: Estate of Dina M. & James S. Belta
128 Bayberry Lane
Westport, Connecticut 06880

PROJECT: Open Space Residential Subdivision
128 Bayberry Lane
Westport, Connecticut 06880

TITLE: Site Development & Grading Plan

NOT VALID WITHOUT SIGNATURE AND ORIGINAL SEAL

MARK E. LANCOR, P.E. #12369

DATE:	05/14/2020
SCALE:	1"=40'
DESIGNED BY:	M.E.L.
DRAWN BY:	C.B.B.
CHECKED BY:	M.E.L.
JOB NO.:	00934
DRAWING NO.:	C-5A

F:\00934 - Bayberry Lane-Westport\Civil\Dwg\005.dwg, SA, 5/13/2020 12:22:23 PM, genus, AutoCAD PDF (Web and Mobile).pc3, ARCH full bleed D (24.00 x 36.00 Inches), 1:1

Notes:			
1. For all building footprints of intermediate size, the contractor shall install next larger system.			
2. For all installations within travelways, refer to manufacturer's specifications for H-20 loading.			
3. Infiltration systems denoted by letter correspond to columns below.			
Infiltration Systems	Storage Vol. (c'f/f)	Layup Length (lf)	(Type specified on drawings are boxed below)
A	3.90	7.40	(Single Trench 12" High Cultec Contactor 100 backfill min 6" stone)
B	4.67	6.25	(Single Trench 16" High Cultec Contactor 125 backfill min 6" stone)
C	4.89	7.50	(Single Trench 18" High Cultec Recharger 150 backfill min 6" stone)
D	5.59	6.33	(Single Trench 21.5" High Cultec Recharger 180 backfill min 6" stone)
E	9.21	7.00	(Single Trench 33.6" High Cultec Recharger 280 backfill min 6" stone)
F	11.32	7.00	(Single Trench Cultec Recharger 330 30.5" High Gallery backfill 1" stone)
G	2.40	6.25	(Single Trench 16" High Std. Infiltrator backfill native material)
H	4.70	6.25	(Single Trench 16" High Std. Infiltrator backfill 1" stone)
I	4.80	6.25	(Double Trench 16" High Std. Infiltrator backfill native material)

RCV, Runoff Capture Volume (CF) (Based on CTDEEP 2004 Stormwater Quality Manual)

RCV =QxRxA

Q, Rainfall (in) =	1	
R, Recharge factor =	0.05+0.009*I	0.95
I, Imperviousness (%) =	100	
A, Area of Drainage (sf)		

Lot No.	Foot Print Area (sf)	RCV (cf)	Required Trench Length per Infiltration System Type A (lf)	B (lf)	C (lf)	D (lf)	E (lf)	F (lf)	G (lf)	H (lf)	I (lf)
1	5,880	465.50	125.80	100.00	97.50	88.62	56.00	42.00	200.00	100.00	100.00
2	5,580	441.75	118.40	100.00	97.50	82.29	49.00	42.00	187.50	100.00	93.75
3	4,030	319.04	88.80	68.75	67.50	63.30	35.00	35.00	137.50	68.75	68.75
4	2,300	182.08	51.80	43.75	37.50	37.98	21.00	21.00	81.25	43.75	43.75
5	3,400	269.17	74.00	62.50	60.00	50.64	35.00	28.00	112.50	62.50	56.25
6	2,990	236.71	66.60	56.25	52.50	44.31	28.00	21.00	100.00	56.25	50.00
7	4,592	363.53	96.20	81.25	75.00	69.63	42.00	35.00	156.25	81.25	81.25
CB 4, 5	12,230	968.21	251.60	212.50	202.50	177.24	112.00	91.00	406.25	206.25	206.25

STRM 318

STORMWATER ROOF RUNOFF RECHARGE SCHEDULE

N.T.S.

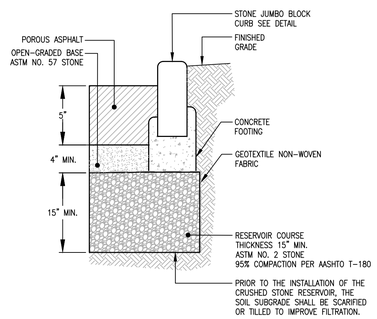

NOTES:
1. STONE RESERVOIR COURSE THICKNESS VARIES
2. O&G INDUSTRIES INC. ¾" STONE MEETS ASTM #8 STONE STANDARDS, ¾" STONE MEETS ASTM NO. 57 STONE STANDARDS AND 2" STONE MEETS ASTM NO. 57 STONE (3/4" STONE) CAN BE USED IN
3. PLACE OF ASTM NO. 2 STONE
ALL MATERIALS SHALL CONFORM TO "UNHSC DESIGN SPECIFICATIONS FOR POROUS ASPHALT
4. PAVEMENT AND INFILTRATION BEDS" BY THE UNIVERSITY OF NEW HAMPSHIRE STORMWATER CENTER.
http://www.unh.edu/erg/cstev
GEOTEXTILE SHALL BE REPLACED WITH ULTRAVIOLET RESISTANT IMPERMEABLE 30 MIL POLYLINER
5. NEAR PROPOSED MAIN DWELLING FOUNDATION WALL. POLYLINER SHALL EXTEND 10' AWAY FROM FOUNDATION AS ORDERED BY PROJECT ENGINEER.
SUBBASE MATERIAL SHOULD BE SPREAD IN MINIMUM 6" LIFTS. COMPACTION IS DONE WITH A 10 TON VIBRATORY ROLLER OR A 13, 500 IBF PLATE COMPACTOR. GREATER LIFT THICKNESSES ARE NORMAL (I.E. 12") WHEN USING EITHER OF THESE COMPACTORS. WHEN USING A ROLLER, THE FIRST TWO PASSES ARE IN VIBRATORY MODE AND THE LAST TWO ARE IN STATIC MODE. COMPACTION IS COMPLETED WHEN NO VISIBLE MOVEMENT CAN BE SEEN IN THE BASE WHEN ROLLED BY THE
6. COMPACTOR. PLATE COMPACTORS WITH COMPACTION INDICATORS SHOULD BE TO DETERMINE WHEN COMPACTION IS COMPLETED. STONES WILL COMPACT MORE COMPLETELY IF MOISTENED DURING COMPACTION. AGGREGATE SHALL NOT BE CRUSHED BY THE COMPACTOR.
7. THE ASTM NO. 57 BASE LAYER IS SPREAD AND COMPACTED AS ONE 4" LIFT. THE STONE MATERIAL SHOULD BE MOISTENING COMPACTION FOR BETTER CONSOLIDATION. THE INITIAL PASSES WITH THE ROLLER CAN BE WITHOUT VIBRATION. A 13,500 IBF PLATE COMPACTOR ALSO CAN BE USED TO COMPACT THE ASTM NO. 57 BASE LAYER,
AFTER INSTALLATION OF THE NO. 57 STONE BASE LAYER, THE POROUS ASPHALT SHALL BE PLACED ON THIS LAYER.
POROUS ASPHALT INSTALLATION CAN BE BY HAND OR WITH MECHANICAL EQUIPMENT.

CRB 001

POROUS ASPHALT PAVEMENT DETAIL

N.T.S.

LEGEND:

- PROP. STORM MANHOLES
- PROP. CATCH BASINS
- PROP. YARD DRAINS
- PROP. GAS VALVE
- PROP. WATER VALVE
- PROP. TRANSFORMER PAD
- PROPOSED PRIMARY SEPTIC TRENCH
- PROPOSED RESERVE SEPTIC TRENCH

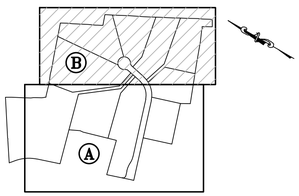

KEY PLAN

SCALE:1"=500'

NOTE:
1. THE CONTRACTOR SHALL NOTIFY "CALL BEFORE YOU DIG" AT LEAST 72 HOURS PRIOR TO THE START OF EXCAVATION, BY CALLING 1-800-922-4455.

NO.	DATE	REVISION DESCRIPTION	DRAWN BY	CHECKED BY

COPYRIGHT © 2020. THESE PLANS ARE THE PROPERTY OF DYMAR, PREPARED AS AN INSTRUMENT OF SERVICE. THEY MAY NOT BE USED FOR ANY PURPOSE NOT SPECIFICALLY AGREED TO IN WRITING BY DYMAR. THE CONTRACT FOR THE PROJECT. DYMAR DOES NOT GUARANTEE THESE PLANS TO REFLECT THE TRUE CONDITIONS. THE CONTRACTOR SHALL VERIFY ALL FIELD CONDITIONS AND DIMENSIONS AND IS RESPONSIBLE FOR NOTIFYING DYMAR IF A DISCREPANCY EXISTS. THERE AFTER, DYMAR SHALL HAVE FINAL SAY.

DYMAR
800 Main Street South · Southbury, Ct. 06488 · (203) 267-1046 · Fax (203) 267-1547
ENGINEERING · PLANNING · SURVEYING · DEVELOPMENT SERVICES

DRAWINGS TO BE USED FOR LAND USE SUBMISSIONS ONLY
NOT FOR CONSTRUCTION

CLIENT: Estate of Dina M. & James S. Belta
128 Bayberry Lane
Westport, Connecticut 06880

PROJECT: Open Space Residential Subdivision
128 Bayberry Lane
Westport, Connecticut 06880

TITLE: Site Development & Grading Plan

NOT VALID WITHOUT SIGNATURE AND ORIGINAL SEAL

MARK E. LANCOR, P.E. #12369

2 / 1

DATE: 05/14/2020
SCALE: 1"=40'
DESIGNED BY: M.E.L.
DRAWN BY: C.B.B.
CHECKED BY: M.E.L.
JOB NO.: 00934
DRAWING NO.: C-5B

F:\00934 - Bayberry Lane-Westport\Civil\Dwg\005.dwg, 5B, 5/13/2020 12:22:24 PM, gemus, AutoCAD PDF (Web and Mobile).pc3, ARCH full bleed D (24.00 x 36.00 Inches), 1:1

TEST HOLE DATA:

TESTING PERFORMED BY DYMAR, 2/5/18, 2/6/18, 2/15/18, 7/5/19, 7/16/19, 5/6/2020 & 5/8/2020 128 BAYBERRY LANE, WESTPORT, CT JOB #934

LOT #1

TEST HOLE #1
0"–16" TOPSOIL
16"–62" LOAM SILTY, TRACE GRAVEL
62"–96" SAND & GRAVEL TILL, FIRM

ROOTS: NONE
GROUNDWATER: 62" SEEP
ROOTS: NONE
MOTTLING: 36"
COMMENTS: NONE

TEST HOLE #2
0"–13" TOPSOIL
13"–40" LOAM TIGHT
40"–98" GLACIAL TILL

ROOTS: NONE
GROUNDWATER: 87"
LEDGE: NONE
MOTTLING: 21"
COMMENTS: NONE

TEST HOLE #3
0"–12" TOPSOIL
12"–48" LOAM TIGHT
48"–93" GLACIAL TILL

ROOTS: NONE
GROUNDWATER: NONE
ROOTS: NONE
MOTTLING: 21"
COMMENTS: NONE

TEST HOLE #4
0"–13" TOPSOIL
13"–36" LOAM TIGHT, SANDY MIX
36"–106" GLACIAL TILL

ROOTS: NONE
GROUNDWATER: 80" SEEP
LEDGE: NONE
MOTTLING: 24"
COMMENTS: NONE

TEST HOLE #5
0"–15" BLACK BROWN TOPSOIL
15"–39" LIGHT BROWN LOAM, SILTY FINE SAND
39"–108" BROWN FINE SAND WITH SILT, TRACE TO LITTLE GRAVEL, FEW TO SOME STONES, TRACE TO FEW BOULDERS

LEDGE: VERY FEW TO 5"
GROUNDWATER: NONE
LEDGE: NONE
MOTTLING: 35"
COMMENTS: NONE

TEST HOLE #101
0"–16" DARK BROWN TOPSOIL
16"–33" SILTY LOAM
33"–98" SILTY SAND, TRACE TO LITTLE GRAVEL, AND TRACE COBBLE

ROOTS: 12"
GROUNDWATER: NONE
LEDGE: NONE
MOTTLING: 33"
COMMENTS: NONE

TEST HOLE #102
0"–4" DARK BROWN TOPSOIL
4"–37" SILTY LOAM
37"–80" SILTY SAND COMPACT, TRACE TO LITTLE GRAVEL AND TRACE TO FEW COBBLES

ROOTS: 15"
GROUNDWATER: NONE
LEDGE: NONE
MOTTLING: 38"
COMMENTS: NONE

TEST HOLE #200
0"–18" TOPSOIL
18"–29" LOAM, SILTY SAND, DAMP
29"–96" SILTY SAND WITH FINE TO COARSE SAND, LITTLE TO SOME GRAVEL, TRACE TO FEW COBBLE, DAMP

ROOTS: 18"
WATER: 93"
MOTTLING: 19"
NOTE: SEEP AT 60"
COMMENTS: NONE

PERCOLATION TEST HOLE #5
DEPTH: 18"
DATE: 2/5/18
STARTING TIME: 12:21

TIME	DEPTH
0 MIN	7"
5 MIN	7"
10 MIN	7–1/8"
15 MIN	7–1/8"
20 MIN	7–1/4"
25 MIN	7–3/4"
30 MIN	7–3/4"
40 MIN	8"
50 MIN	8–1/8"
60 MIN	8–1/8"

SEEPAGE RATE: 1"/27 MIN

PERCOLATION TEST–BETWEEN TEST HOLES #5 & #7
DEPTH: 18"
DATE: 2/5/18
STARTING TIME: 12:21

TIME	DEPTH
0 MIN	7"
5 MIN	7"
10 MIN	7–1/8"
15 MIN	7–1/8"
20 MIN	7–1/4"
25 MIN	7–3/4"
30 MIN	7–3/4"
40 MIN	8"
50 MIN	8–1/8"
60 MIN	8–1/8"

SEEPAGE RATE: 1"/27 MIN

PERCOLATION TEST–BETWEEN TEST HOLES #101 & #102
DEPTH: 18"
DATE: 11/1/19
STARTING TIME: 1:15

TIME	DEPTH
0 MIN	0.53'
5 MIN	0.56'
10 MIN	0.59'
15 MIN	0.62'
20 MIN	0.65
25 MIN	0.67'
30 MIN	0.69'
40 MIN	0.71'
50 MIN	0.72'
60 MIN	0.72

SEEPAGE RATE: 1"/110 MIN

PERCOLATION TEST –TEST HOLE #101
DEPTH: 24"
DATE: 5/6/20
STARTING TIME: 12:10

TIME	DEPTH
0 MIN	0.99'
5 MIN	1.02'
10 MIN	1.04'
15 MIN	1.06'
20 MIN	1.09'
25 MIN	1.11'
30 MIN	1.13'
40 MIN	1.16'
50 MIN	1.19'
60 MIN	1.22'

SEEPAGE RATE: 1"/27 MIN

PERCOLATION TEST –TEST HOLE #200
DEPTH: 24"
DATE: 5/6/20
STARTING TIME: 12:10

TIME	DEPTH
0 MIN	0.60'
5 MIN	0.62'
10 MIN	0.64'
15 MIN	0.66'
20 MIN	0.68'
25 MIN	0.70'
30 MIN	0.71'
40 MIN	0.74'
50 MIN	0.77'
60 MIN	0.80'

SEEPAGE RATE: 1"/27 MIN

LOT #2

TEST HOLE #6
0"–16" DARK BROWN TOPSOIL
16"–42" LIGHT BROWN LOAM, VERY FINE SAND WITH SILT, TRACE TO LITTLE GRAVEL
42"–108" BROWN FINE SILTY SAND, TRACE TILL, LITTLE GRAVEL, FEW COBBLES, FEW TO SOME STONES, TRACE TO FEW BOULDERS

ROOTS: VERY FEW TO 5"
GROUNDWATER: NONE
LEDGE: NONE
MOTTLING: 33"
COMMENTS: NONE

TEST HOLE #7
0"–13" DARK BROWN TOPSOIL
13"–36" LIGHT BROWN LOAM, VERY FINE SAND WITH SILT, TRACE TO FEW COBBLES
36"–102" BROWN FINE SILTY SAND, TRACE TO LITTLE GRAVEL, FEW TO SOME COBBLES

ROOTS: VERY FEW TO 6"
GROUNDWATER: NONE
LEDGE: NONE
MOTTLING: 32"
COMMENTS: NONE

TEST HOLE #8
0"–13" DARK BROWN TOPSOIL
13"–27" LIGHT BROWN LOAM, VERY COURSE SAND WITH SILT, TRACE TO FEW COBBLES
27"–102" BROWN FINE SILTY SAND, TRACE TO LITTLE GRAVEL, FEW TO SOME COBBLES

ROOTS: 5'
GROUNDWATER: NONE
LEDGE: NONE
MOTTLING: 35"
COMMENTS: NONE

TEST HOLE #9
0"–12" DARK BROWN TOPSOIL
12"–26" LIGHT BROWN LOAM, FINE SAND, TRACE SILT, TRACE GRAVEL
26"–92" BROWN FINE SAND, LITTLE GRAVEL, TRACE COBBLES

ROOTS: 5"
GROUNDWATER: NONE
LEDGE: NONE
MOTTLING: 24"
COMMENTS: NONE

TEST HOLE #10
0"–10" DARK BROWN TOPSOIL
11"–25" LIGHT BROWN LOAM, FINE SAND, TRACE SILT, TRACE GRAVEL
25"–108" BROWN FINE SAND, LITTLE GRAVEL, TRACE COBBLES

ROOTS: 5"
GROUNDWATER: NONE
LEDGE: NONE
MOTTLING: 27"
COMMENTS: NONE

TEST HOLE #11
0"–14" DARK BROWN TOPSOIL
14"–27" LIGHT BROWN LOAM, VERY FINE SAND WITH SILT, TRACE TO FEW COBBLES
27"–108" BROWN FINE SILTY SAND, TRACE TO LITTLE GRAVEL, FEW TO SOME COBBLES

ROOTS: 5"
GROUNDWATER: NONE
LEDGE: NONE
MOTTLING: 31"
COMMENTS: NONE

TEST HOLE #12
0"–13" DARK BROWN TOPSOIL
13"–27" LIGHT BROWN LOAM, VERY FINE SAND
27"–102" BROWN FINE TO MEDIUM SAND, NO SILT, TRACE TO LITTLE GRAVEL, TRACE COBBLES, TRACE BOULDERS

ROOTS: 5'
GROUNDWATER: NONE
LEDGE: NONE
MOTTLING: 32"
COMMENTS: NONE

TEST HOLE #201
0"–19" TOPSOIL
19"–31" LOAM
31"–97" COMPACT TILL FINE TO COARSE SAND

ROOTS: NONE
WATER: 94"
LEDGE: NONE
MOTTLING: 19"
COMMENTS: NONE

PERCOLATION TEST–BETWEEN TEST HOLES #6 & #8
DEPTH: 18"
DATE: 2/5/18
STARTING TIME: 12:21

TIME	DEPTH
0 MIN	6–1/2"
5 MIN	7"
10 MIN	6–1/2"
15 MIN	6–1/4"
20 MIN	6–1/2"
25 MIN	6–3/4"
30 MIN	6–7/8"
40 MIN	6–7/8"
50 MIN	7"
60 MIN	7"

SEEPAGE RATE: 1"/27 MIN

PERCOLATION TEST–BETWEEN TEST HOLES #9 & #11
DEPTH: 18"
DATE: 2/5/18
STARTING TIME: 12:29

TIME	DEPTH
0 MIN	7"
5 MIN	7–1/8"
10 MIN	7–1/4"
15 MIN	8"
20 MIN	8"
25 MIN	8–3/4"
30 MIN	8–7/8"
40 MIN	9–1/8"
50 MIN	9–1/8"
60 MIN	9–1/2"

SEEPAGE RATE: 1"/27 MIN

PERCOLATION TEST–BETWEEN HOLES #10 & #11
DEPTH: 18"
DATE: 2/5/18
STARTING TIME: 12:36

TIME	DEPTH
0 MIN	6"
5 MIN	6–1/4"
10 MIN	6–1/2"
15 MIN	6–1/2"
20 MIN	6–3/4"
25 MIN	6–7/8"
30 MIN	7"
40 MIN	7"
50 MIN	7–1/8"
60 MIN	7–1/4"

SEEPAGE RATE: 1"/80 MIN

PERCOLATION TEST – BETWEEN TEST HOLES #10 & #12
DEPTH: 24"
DATE: 11/1/19
STARTING TIME: 2:50

TIME	DEPTH
0 MIN	1.01'
5 MIN	1.23'
10 MIN	1.35'
15 MIN	1.46'
20 MIN	1.54'
25 MIN	1.61'
30 MIN	1.67'
40 MIN	1.79'
50 MIN	DRY
60 MIN	DRY

SEEPAGE RATE: 1"/10 MIN

PERCOLATION TEST –TEST HOLE #201
DEPTH: 24"
DATE: 5/6/20
STARTING TIME: 1:25

TIME	DEPTH
0 MIN	0.89'
5 MIN	0.94'
10 MIN	0.98'
15 MIN	1.01'
20 MIN	1.04'
25 MIN	1.07'
30 MIN	1.09'
40 MIN	1.13'
50 MIN	1.17'
60 MIN	1.21'

SEEPAGE RATE: 1"/20 MIN

LOT #3

TEST HOLE #15
0"–13" DARK BROWN TOPSOIL
13"–24" LIGHT BROWN LOAM, LOOSE, LITTLE GRAVEL, SOME COBBLES
24"–76" BROWN COURSE SAND, SOME GRAVEL, SOME COBBLES, STONE, BOULDERS

ROOTS: 4"
GROUNDWATER: NONE
LEDGE: NONE
MOTTLING: NONE
COMMENTS: NONE

TEST HOLE #16
0"–15" DARK BROWN TOPSOIL
15"–32" BROWN LOAM, STONY VERY LOOSE, TRACE TO LITTLE GRAVEL, FEW TO SOME COBBLES, FEW TO SOME STONE
32"–108" BROWN COURSE SAND, SOME GRAVEL, SOME COBBLES, FEW TO SOME STONE, SOME BOULDERS, LOOSE IN PLACE

ROOTS: 15'
GROUNDWATER: 105"
LEDGE: NONE
MOTTLING: NONE
COMMENTS: LOAM DEPTH DIFFICULT TO DISCERN, DISTURB

TEST HOLE #202
0"–14" DARK BROWN SILT LOAM TOPSOIL
14"–29" BROWN/GRAY LOAM
29"–104" BROWN COMPACT TILL FINE TO COARSE SAND, SOME GRAVEL, FEW TO SOME COBBLE, TRACE STONE, TRACE TO FEW BOULDERS, VERY FIRM TO FIRM IN PLACE, VERY FRIABLE TO LOOSE IN HAND, DRY

ROOTS: 14"
WATER: NONE
LEDGE: NONE
MOTTLING: 43"
COMMENTS: NONE

PERCOLATION TEST–BETWEEN TEST HOLES #13 & #15 PRIMARY
DEPTH: 24"
DATE: 2/15/18
STARTING TIME: 1:25

TIME	DEPTH
0 MIN	0.92'
5 MIN	0.98'
10 MIN	1.03'
15 MIN	1.07'
20 MIN	1.10'
25 MIN	1.13'
30 MIN	1.16'
40 MIN	1.21'
50 MIN	1.26'
60 MIN	1.31'

SEEPAGE RATE: 1"/17 MIN

PERCOLATION TEST–BETWEEN TEST HOLES 14 & 16 RESERVE
DEPTH: 24"
DATE: 2/15/18
STARTING TIME: 1:25

TIME	DEPTH
0 MIN	0.82'
5 MIN	0.87'
10 MIN	0.92'
15 MIN	0.96"
20 MIN	0.99'
25 MIN	1.03'
30 MIN	1.06'
40 MIN	1.12'
50 MIN	1.17'
60 MIN	1.23'

SEEPAGE RATE: 1"/15 MIN

PERCOLATION TEST – NEAR TEST HOLE #14
DEPTH: 18'
DATE: 11/1/19
STARTING TIME: 1:25

TIME	DEPTH
0 MIN	0.65'
5 MIN	0.68'
10 MIN	0.72'
15 MIN	0.75"
20 MIN	0.78'
25 MIN	0.81'
30 MIN	0.84'
40 MIN	0.90'
50 MIN	0.93'
60 MIN	0.95'

SEEPAGE RATE: 1"/33 MIN

PERCOLATION TEST – TEST HOLE #202
DEPTH: 24"
DATE: 5/6/20
STARTING TIME: 1:28

TIME	DEPTH
0 MIN	0.88'
5 MIN	0.90'
10 MIN	0.92'
15 MIN	0.95"
20 MIN	0.97'
25 MIN	0.99'
30 MIN	1.01'
40 MIN	1.05'
50 MIN	1.09'
60 MIN	1.13'

SEEPAGE RATE: 1"/20 MIN

LOT #4

TEST HOLE #13
0"–13" DARK BROWN TOPSOIL
13"–30" ORANGE BROWN LOAM, WITH FINE TO MED SAND, TRACE TO LITTLE GRAVEL
30"–32" SEAM OF GRAVEL AND STONE
32"–93" BLACK FINE SAND WITH TRACE GRAVEL, FEW TO SOME COBBLES

ROOTS: 6"
GROUNDWATER: SEEP AT 72'
LEDGE: NONE
MOTTLING: NONE
COMMENTS: 15' WEST OF ORIGINAL STAKEOUT

TEST HOLE #14
0"–10" DARK BROWN TOPSOIL
10"–33" LIGHT BROWN LOAM
33"–84" BROWN COARSE SAND WITH GRAVEL

ROOTS: 6"
GROUNDWATER: 82"
LEDGE: NONE
MOTTLING: 31" BLACK COLOR
COMMENTS: 10' WEST OF ORIGINAL STAKEOUT

TEST HOLE #17
0"–7" DARK BROWN TOPSOIL
7"–29" DISTURBED LOAM, SOME GRAVEL, SOME COBBLE, SOME STONE
29"–78" MEDIUM TO COURSE SAND, RESTRICTED BOTTOM

ROOTS: NONE
GROUNDWATER: NONE
LEDGE: NONE
MOTTLING: NONE
COMMENTS: NONE

TEST HOLE #18
0"–10" DARK BROWN TOPSOIL
10"–84" GRAY LOOSE SAND, SOME GRAVEL, SOME COBBLE, SOME STONE AND BOULDERS

ROOTS: 12"
GROUNDWATER: NONE
LEDGE: 72"
MOTTLING: 36"
COMMENTS: NONE

TEST HOLE #19
0"–12" DARK BROWN TOPSOIL
12"–33" LIGHT BROWN LOAM, SANDY FIRM SAND, LITTLE SILT, TRACE GRAVEL
33"–89" BROWN COARSE SAND, MEDIUM SAND, MEDIUM FINES, SOME GRAVEL, SOME COBBLES, SOME STONE, FEW BOULDERS

ROOTS: NONE
GROUNDWATER: NONE
LEDGE: NONE
MOTTLING: 44"
COMMENTS: NONE

TEST HOLE #20
0"–17" DARK BROWN TOPSOIL
17"–27" LIGHT BROWN LOAM, SANDY FIRM SAND, LITTLE SILT, TRACE GRAVEL
27"–102" BROWN COURSE SAND, MEDIUM SAND, MEDIUM FINES, SOME GRAVEL, SOME COBBLES, SOME STONE, FEW BOULDERS

ROOTS: 12"
GROUNDWATER: 90"
LEDGE: NONE
MOTTLING: NONE
COMMENTS: SEEP AT 90" NORTH SIDE

TEST HOLE #103
0"–17" DARK BROWN TOPSOIL
17"–41" LOAMY, SOME GRAVEL, LOOSE IN HAND, FIRM IN PLACE
41"–92" TRACE TO LITTLE GRAVEL COMPACT, SOME COBBLE AND SOME STONES, LOOSE IN HAND, FIRM IN PLACE

ROOTS: 10"
GROUNDWATER: NONE
LEDGE: 92"
MOTTLING: NONE
COMMENTS: ROOTS AT 80"

TEST HOLE #104
0"–17" DARK BROWN TOPSOIL
17"–31" BROWN SILTY LOAM
31"–90" FIRM SAND AND GRAVEL COMPACT

ROOTS: 10"
GROUNDWATER: 82"
LEDGE: NONE
MOTTLING: NONE
COMMENTS: NONE

TEST HOLE #105
0"–14" DARK BROWN TOPSOIL
14"–32" LIGHT BROWN LOAM, FIRM IN PLACE
32"–102" GRAY LITTLE TO SOME GRAVEL AND SAND, FEW COBBLES AND TRACE STONE LOOSE IN HAND

ROOTS: 12"
GROUNDWATER: 100"
LEDGE: NONE
MOTTLING: 23"
COMMENTS: NONE

TEST HOLE #106
0"–18" DARK BROWN TOPSOIL
18"–34" LIGHT BROWN COMPACT LOAM
34"–92" GRAY LITTLE TO SOME GRAVEL AND SAND, FEW TO SOME COBBLES LOOSE IN HAND

ROOTS: 12"
GROUNDWATER: 88"
LEDGE: NONE
MOTTLING: NONE
COMMENTS: NONE

PERCOLATION TEST–BETWEEN TEST HOLES #17 & #19 PRIMARY
DEPTH: 18"
DATE: 2/15/18
STARTING TIME: 1:35

TIME	DEPTH
0 MIN	0.57'
5 MIN	0.68'
10 MIN	0.75"
15 MIN	0.81'
20 MIN	0.87'
25 MIN	0.93'
30 MIN	0.99'
40 MIN	1.07'
50 MIN	1.14'
60 MIN	1.20'

SEEPAGE RATE: 1"/14 MIN

PERCOLATION TEST – BETWEEN HOLES #18 & #20 RESERVE
DEPTH: 24'
DATE: 2/15/18
STARTING TIME: 1:35

TIME	DEPTH
0 MIN	1.03'
5 MIN	1.15'
10 MIN	1.24'
15 MIN	1.32"
20 MIN	1.39'
25 MIN	1.45'
30 MIN	1.50'
40 MIN	1.59'
50 MIN	1.67'
60 MIN	1.74'

SEEPAGE RATE: 1"/12 MIN

PERCOLATION TEST–BETWEEN TEST HOLES #106 & #105
DEPTH: 24'
DATE: 11/1/19
STARTING TIME: 2:45

TIME	DEPTH
0 MIN	1.15'
5 MIN	1.25'
10 MIN	1.31'
15 MIN	1.36"
20 MIN	1.40'
25 MIN	1.47'
30 MIN	1.53'
40 MIN	1.61'
50 MIN	1.69'
60 MIN	1.73'

SEEPAGE RATE: 1"/14 MIN

PERCOLATION TEST – BETWEEN TEST HOLES #103 & #104
DEPTH: 24'
DATE: 11/1/19
STARTING TIME: 2:45

TIME	DEPTH
0 MIN	1.1'
5 MIN	1.2'
10 MIN	1.3'
15 MIN	1.38'
20 MIN	1.43'
25 MIN	1.50'
30 MIN	1.55'
40 MIN	1.61'
50 MIN	1.65'
60 MIN	1.69'

SEEPAGE RATE: 1"/21 MIN

LOT #5

TEST HOLE #21
0"–10" DARK BROWN TOPSOIL
10"–35" BROWN LOAM
35"–96" GRAY GLACIAL TILL, FINE TO COARSE SAND AND LOOSE GRAVEL, SOME GRAVEL, SOME COBBLES, SOME STONE, FEW BOULDERS

ROOTS: 10"
GROUNDWATER: NONE
LEDGE: NONE
MOTTLING: 29"
COMMENTS: NONE

TEST HOLE #22
0"–15" DARK BROWN TOPSOIL
15"–27" BROWN LOAM
27"–73" BROWN FINE TO MEDIUM SAND, SILTY, TRACE TO LITTLE GRAVEL, FEW TO SOME COBBLES, LOOSE IN PLACE, LOOSE IN HAND

ROOTS: 15"
GROUNDWATER: 58"
LEDGE: NONE
MOTTLING: 27"
COMMENTS: NONE

TEST HOLE #23
0"–12" DARK BROWN TOPSOIL
12"–105" GRAY COMPACT TILL

ROOTS: 15"
GROUNDWATER: NONE
LEDGE: NONE
MOTTLING: 54"
COMMENTS: COLOR CHANGE TO DARK GREY @ 64", NO CHANGE IN MATERIAL

TEST HOLE #24
0"–5" DARK BROWN TOPSOIL
5"–24" GRAY SAND AND GRAVEL, LOOSE
24"–42" GRAY GRAVEL, LOOSE
42"–59" BLACK VERY COMPACT GRAVEL WITH SAND
59"–108" WEATHERED ROCK, POSSIBLE LEDGE

ROOTS: 6"
GROUNDWATER: NONE
LEDGE: 108"
MOTTLING: NONE
COMMENTS: NONE

TEST HOLE #203
0"–17" DARK BROWN TOPSOIL
17"–30" LOAM, SANDY
30"–79" COMPACT TILL WITH LITTLE SILT, SOME GRAVEL, FEW TO SOME COBBLE, SOME STONE, VERY FIRM IN PLACE, LOOSE IN HAND, DRY

ROOTS: 32"
WATER: NONE
LEDGE: NONE
MOTTLING: 56"
COMMENTS: NONE

PERCOLATION TEST–BETWEEN TEST HOLES #21 & #23 PRIMARY
DEPTH: 18'
DATE: 2/15/18
STARTING TIME: 2:45

TIME	DEPTH
0 MIN	0.82'
5 MIN	0.87'
10 MIN	0.89"
15 MIN	0.92'
20 MIN	0.95'
25 MIN	0.96'
30 MIN	0.97'
40 MIN	0.99'
50 MIN	1.01'
60 MIN	1.03'

SEEPAGE RATE: 1"/42 MIN

PERCOLATION TEST–BETWEEN TEST HOLES #22 & #24 RESERVE
DEPTH: 24'
DATE: 2/15/18
STARTING TIME: 2:45

TIME	DEPTH
0 MIN	0.72'
5 MIN	0.80'
10 MIN	0.87'
15 MIN	0.89"
20 MIN	0.92'
25 MIN	0.95'
30 MIN	0.98'
40 MIN	1.03'
50 MIN	1.05'
60 MIN	1.07'

SEEPAGE RATE: 1"/42 MIN

PERCOLATION TEST–BETWEEN TEST HOLES #23 & #24 RESERVE
DEPTH: 24'
DATE: 11/1/19
STARTING TIME: 2:50

TIME	DEPTH
0 MIN	1.08'
5 MIN	1.21'
10 MIN	1.28'
15 MIN	1.33'
20 MIN	1.37'
25 MIN	1.40'
30 MIN	1.44'
40 MIN	1.52'
50 MIN	1.57'
60 MIN	1.61'

SEEPAGE RATE: 1"/20 MIN

PERCOLATION TEST–BETWEEN HOLES #107 & #10
DEPTH: 24'
DATE: 11/4/19
STARTING TIME: 1:20

TIME	DEPTH
0 MIN	0.94'
5 MIN	0.98'
10 MIN	1.02'
15 MIN	1.11'
20 MIN	1.19'
25 MIN	1.20
30 MIN	1.22'
40 MIN	1.24'
50 MIN	1.26'
60 MIN	1.28'

SEEPAGE RATE: 1"/42 MIN

PERCOLATION TEST–BETWEEN TEST HOLES #21 & #203
DEPTH: 24'
DATE: 5/8/19
STARTING TIME: 11:59

TIME	DEPTH
0 MIN	1.07'
5 MIN	1.20'
10 MIN	1.27'
15 MIN	1.33'
20 MIN	1.40'
25 MIN	1.45'
30 MIN	1.50'
40 MIN	1.59'
50 MIN	1.68
60 MIN	1.75'

SEEPAGE RATE: 1"/10 MIN

PERCOLATION TEST–TEST HOLE #203
DEPTH: 24'
DATE: 5/8/20
STARTING TIME: 12:00

TIME	DEPTH
0 MIN	0.86'
5 MIN	0.91'
10 MIN	0.96'
15 MIN	0.99'
20 MIN	1.02'
25 MIN	1.04'
30 MIN	1.08'
40 MIN	1.13
50 MIN	1.17'
60 MIN	1.21'

SEEPAGE RATE: 1"/20 MIN

PERCOLATION TEST–BETWEEN TEST HOLES #24 & TH DPW5
DEPTH: 24'
DATE: 5/8/20
STARTING TIME: 12:01

TIME	DEPTH
0 MIN	0.92'
5 MIN	1.10'
10 MIN	1.24'
15 MIN	1.34'
20 MIN	1.42'
25 MIN	1.48'
30 MIN	1.54
40 MIN	1.63'
50 MIN	1.71'
60 MIN	1.79'

SEEPAGE RATE: 1"/10 MIN

LOT #6

TEST HOLE #25
0"–11" DARK BROWN TOPSOIL
11"–27" BROWN LOAM, WITH FINE GRAVEL
27"–93" GRAY FINE TO MEDIUM SAND, GLACIAL TILL, SOME GRAVEL, SOME COBBLES

ROOTS: 24"
GROUNDWATER: 92"
LEDGE: NONE
MOTTLING: 33"
COMMENTS: ORGANIC 5" SEAM AT 35', TRACE GRAVEL

TEST HOLE #26
0"–15" DARK BROWN TOPSOIL
15"–32" BROWN LOAM
32"–103" GRAY COMPACT TILL, FINE TO MEDIUM SAND, LITTLE TO SOME GRAVEL, SOME COBBLES

ROOTS: 15"
GROUNDWATER: 96"
LEDGE: NONE
MOTTLING: 24"
COMMENTS: SEEP AT 65"

TEST HOLE #27
0"–12" DARK BROWN TOPSOIL
12"–33" BROWN LOAM
33"–96" GRAY FINE TO MEDIUM SAND, SOME GRAVEL, SOME COBBLES

ROOTS: 12"
GROUNDWATER: 78"
LEDGE: NONE
MOTTLING: 29"
COMMENTS: SEEP AT 70"

TEST HOLE #28
0"–17" DARK BROWN TOPSOIL
17"–27" BROWN LOAM
27"–102" GRAY FINE TO MEDIUM SAND, SOME GRAVEL, SOME COBBLES

ROOTS: 12" & AT 87" FEW ROOTS
GROUNDWATER: 90" (SEEP AT 87')
LEDGE: NONE
MOTTLING: NONE
COMMENTS: NONE

TEST HOLE #107
0"–21" DARK BROWN TOPSOIL
21"–44" LIGHT BROWN LOAM AND TRACE SAND
44"–96" GRAY TRACE TO LITTLE SAND AND GRAVEL, LOOSE IN PLACE FEW COBBLES AND TRACE STONE

DATE: 18"
GROUNDWATER: 82"
LEDGE: NONE
MOTTLING: NONE
COMMENTS: NONE

PERCOLATION TEST HOLE #107
DEPTH: 24'
DATE: 11/4/19
STARTING TIME: 1:20

TIME	DEPTH
0 MIN	0.94'
5 MIN	0.98'
10 MIN	1.02'
15 MIN	1.11'
20 MIN	1.19'
25 MIN	1.20'
30 MIN	1.22'
40 MIN	1.24'
50 MIN	1.26'
60 MIN	1.28'

SEEPAGE RATE: 1"/42 MIN

TEST HOLE #108
0"–22" DARK BROWN TOPSOIL
22"–36" LIGHT BROWN SILTY LOAM
36"–100" GRAY SILTY SAND AND GRAVEL MIX LOOSE IN PLACE

ROOTS: NONE
GROUNDWATER: NONE
LEDGE: NONE
MOTTLING: NONE
COMMENTS: NONE

TEST HOLE #109
0"–20" DARK BROWN TOPSOIL
20"–33" LIGHT BROWN LOAM
33'–93' GRAY LITTLE TO SOME GRAVEL AND SAND, LOOSE IN PLACE

ROOTS: 3"
GROUNDWATER: NONE
LEDGE: NONE
MOTTLING: NONE
COMMENTS: NONE

TEST HOLE #110
0"–18" DARK BROWN TOPSOIL
18"–36" LIGHT BROWN LOAM
36"–93" GRAY LITTLE TO SOME GRAVEL AND SAND, TRACE TO FEW LOOSE IN HAND COBBLES

ROOTS: 16"
GROUNDWATER: NONE
LEDGE: NONE
MOTTLING: NONE
COMMENTS: NONE

PERCOLATION TEST–BETWEEN TEST HOLES #27 & #28 PRIMARY
DEPTH: 24"
DATE: 2/15/18
STARTING TIME: 2:55

TIME	DEPTH
0 MIN	1.00'
5 MIN	1.04'
10 MIN	1.06"
15 MIN	1.08'
20 MIN	1.10'
25 MIN	1.11'
30 MIN	1.12'
40 MIN	1.14'
50 MIN	1.17'
60 MIN	1.20'

SEEPAGE RATE: 1"/28 MIN

PERCOLATION TEST–TEST HOLE #109 RESERVE
DEPTH: 18'
DATE: 2/15/18
STARTING TIME: 2:55

TIME	DEPTH
0 MIN	0.49'
5 MIN	0.57'
10 MIN	0.64'
15 MIN	0.69"
20 MIN	0.74'
25 MIN	0.78'
30 MIN	0.81'
40 MIN	0.87'
50 MIN	0.91'
60 MIN	0.94'

SEEPAGE RATE: 1"/28 MIN

PERCOLATION TEST–TEST HOLE #108
DEPTH: 24'
DATE: 11/4/19
STARTING TIME: 1:20

TIME	DEPTH
0 MIN	0.65'
5 MIN	0.69'
10 MIN	0.72'
15 MIN	0.77"
20 MIN	0.82'
25 MIN	0.88'
30 MIN	0.95'
40 MIN	0.99'
50 MIN	1.03'
60 MIN	1.06'

SEEPAGE RATE: 1"/24 MIN

PERCOLATION TEST–BETWEEN TH #25
DEPTH: 30'
DATE: 11/4/19
STARTING TIME: 1:20

TIME	DEPTH
0 MIN	1.37'
5 MIN	1.46'
10 MIN	1.52'
15 MIN	1.55"
20 MIN	1.58'
25 MIN	1.53'
30 MIN	1.67'
40 MIN	1.71'
50 MIN	1.74'
60 MIN	1.78'

SEEPAGE RATE: 1"/24 MIN

PERCOLATION TEST–BETWEEN TEST HOLES #26 & TH #27
DEPTH: 24"
DATE: 5/8/20
STARTING TIME: 11:58

TIME	DEPTH
0 MIN	0.80'
5 MIN	0.82'
10 MIN	0.84'
15 MIN	0.87'
20 MIN	0.89'
25 MIN	0.90'
30 MIN	0.91'
40 MIN	0.93'
50 MIN	0.95'
60 MIN	0.97'

SEEPAGE RATE: 1"/40 MIN

LOT #7

TEST HOLE #30
0"–15" DARK BROWN TOPSOIL
15"–35" BROWN LOAM, WITH TRACE TO LITTLE GRAVEL
35"–97" GLACIAL TILL, TRACE TO LITTLE SAND AND GRAVEL, VERY COMPACT, TRACE TO FEW COBBLES, TRACE TO FEW STONES

ROOTS: NONE
GROUNDWATER: NONE
LEDGE: NONE
MOTTLING: 35"
COMMENTS: NONE

TEST HOLE #32
0"–17" DARK BROWN TOPSOIL
17"–26" BROWN LOAM, WITH TRACE TO LITTLE GRAVEL
26"–100" GLACIAL TILL, TRACE TO LITTLE SAND AND GRAVEL, VERY COMPACT, TRACE TO FEW COBBLES, TRACE TO FEW STONES

ROOTS: NONE
GROUNDWATER: 100"
LEDGE: NONE
MOTTLING: 26"
COMMENTS: SEEP AT 77"

NOTE:
1. THE CONTRACTOR SHALL NOTIFY "CALL BEFORE YOU DIG" AT LEAST 72 HOURS PRIOR TO THE START OF EXCAVATION, BY CALLING 1-800-922-4455.

REVISION			
NO.	DATE	DESCRIPTION	DRAWN BY	CHECKED BY

COPYRIGHT © 2020: THESE PLANS ARE THE PROPERTY OF DYMAR, PREPARED AS AN INSTRUMENT OF SERVICE FOR USE SOLELY WITH RESPECT TO THIS PROJECT. THE INFORMATION SHOWN ON THESE PLANS IS SUPPLIED TO THE PROJECT. DYMAR DOES NOT GUARANTEE THESE PLANS TO REFLECT THE TRUE CONDITIONS. THE CONTRACTOR SHALL VERIFY ALL FIELD CONDITIONS AND DIMENSIONS AND IS RESPONSIBLE FOR NOTIFYING DYMAR IF A DISCREPANCY EXISTS. THESE LETTERS DYMA

TEST HOLE DATA:

TESTING PERFORMED BY DYMAR, 2/5/18, 2/6/18, 2/15/18, 7/5/19, 7/16/19, 5/6/2020 & 5/8/2020 128 BAYBERRY LANE, WESTPORT, CT JOB #934

LOT #7 (CONT.)

TEST HOLE #33
0"–14" DARK BROWN TOPSOIL
14"–36" BROWN LOAM, WITH TRACE TO LITTLE GRAVEL AND TRACE TO FEW COBBLES
36"–96" GLACIAL TILL, TRACE TO LITTLE AND VERY COMPACT SAND AND GRAVEL, WITH FEW COBBLES AND FEW STONES

ROOTS: 15'
GROUNDWATER: 100'
LEDGE: NONE
MOTTLING: NONE
COMMENTS: RESTRICTIVE LAYER AT 48"

TEST HOLE #34
0"–15" DARK BROWN TOPSOIL
15"–35" BROWN LOAM, WITH TRACE TO LITTLE GRAVEL AND TRACE TO FEW COBBLES
35"–97" GLACIAL TILL, TRACE TO LITTLE SAND AND GRAVEL, VERY COMPACT, TRACE TO FEW COBBLES, TRACE TO FEW STONES

ROOTS: 12'
GROUNDWATER: NONE
LEDGE: NONE
MOTTLING: 31'
COMMENTS: NONE

TEST HOLE #35
0"–18" DARK BROWN TOPSOIL
18"–36" BROWN LOAM, WITH TRACE TO LITTLE GRAVEL AND TRACE TO FEW COBBLES
36"–98" GLACIAL TILL, TRACE TO LITTLE SAND AND GRAVEL, VERY COMPACT, TRACE TO FEW COBBLES, TRACE TO FEW STONES

ROOTS: 18'
GROUNDWATER: 98'
LEDGE: NONE
MOTTLING: 50' +/–
COMMENTS: NONE

TEST HOLE #36
0"–12" DARK BROWN TOPSOIL
12"–72" BROWN LOAM
72"–105" GLACIAL TILL, TRACE TO LITTLE SAND AND GRAVEL, VERY COMPACT, TRACE TO FEW COBBLES, TRACE TO FEW STONES

ROOTS: 12'
GROUNDWATER: 105'
LEDGE: NONE
MOTTLING: 62'
COMMENTS: NONE

TEST HOLE #204
0"–20" DARK BROWN TOPSOIL
20"–29" LIGHT BROWN LOAM
29"–90" BROWN COMPACT TILL, SOME GRAVEL, FEW TO SOME COBBLE, TRACE TO SOME STONE, VERY FIRM IN PLACE, VERY FRIABLE IN HAND, DAMP

ROOTS: 20"
WATER: 75"
LEDGE: NONE
MOTTLING: 55"
COMMENTS: SEEP AT 57"

TEST HOLE #205
0"–15" DARK BROWN TOPSOIL
15"–37" LIGHT BROWN LOAM, SILTY
37"–94" BROWN COMPACT TILL, SILTY SAND, FINE TO COARSE, SOME GRAVEL AND COBBLE, FEW STONES, FIRM IN PLACE, VERY FRIABLE IN HAND

ROOTS: 70"
WATER: 82"
LEDGE: NONE
MOTTLING: 75"
COMMENTS: NONE

TEST HOLE #206
0"–14" DARK BROWN TOPSOIL
14"–27" LIGHT BROWN LOAM, SANDY WITH GRAVEL
27"–90" BROWN COMPACT TILL, FINE TO COARSE SAND, SOME GRAVEL, FEW TO SOME COBBLE, FEW TO SOME STONE, FIRM IN PLACE, VERY FRIABLE IN HAND

ROOTS: 34:
WATER: 86"
LEDGE: NONE
MOTTLING: 53"
COMMENTS: SEEP AT 84"

TEST HOLE #207
0"–11" DARK BROWN TOPSOIL
11"–21" LIGHT BROWN LOAM, SANDY WITH GRAVEL
21"–96" BROWN COMPACT TILL, FINE TO COARSE SAND, SOME GRAVEL, FEW TO SOME COBBLE, FEW TO SOME STONE, FIRM IN PLACE, VERY FRIABLE IN HAND

ROOTS: 24"
WATER: 88"
LEDGE: NONE
MOTTLING: 46"
COMMENTS: SEEP AT 81"

PERCOLATION TEST–TEST HOLE #33
DEPTH: 18"
DATE: 11/4/19
STARTING TIME: 4:10

TIME	DEPTH
0 MIN	0.47'
5 MIN	0.50'
10 MIN	0.53'
15 MIN	0.55'
20 MIN	0.57'
25 MIN	0.59'
30 MIN	0.60'
40 MIN	0.61'
50 MIN	0.62'
60 MIN	0.62'

SEEPAGE RATE: 1"/166 MIN

PERCOLATION TEST–TEST HOLE #34
DEPTH: 24"
DATE: 11/4/19
STARTING TIME: 4:10

TIME	DEPTH
0 MIN	0.97'
5 MIN	1.11'
10 MIN	1.21'
15 MIN	1.30'
20 MIN	1.39'
25 MIN	1.46'
30 MIN	1.50'
40 MIN	1.53'
50 MIN	1.55'
60 MIN	1.57'

SEEPAGE RATE: 1"/42 MIN

PERCOLATION TEST–BETWEEN TEST HOLES #204 & #206
DEPTH: 24"
DATE: 5/6/20
STARTING TIME: 3:01

TIME	DEPTH
0 MIN	0.92'
5 MIN	1.09'
10 MIN	1.15'
15 MIN	1.20'
20 MIN	1.24'
25 MIN	1.27'
30 MIN	1.29'
40 MIN	1.35'
50 MIN	1.39'
60 MIN	1.43'

SEEPAGE RATE: 1"/20 MIN

PERCOLATION TEST–TEST HOLE #207
DEPTH: 24"
DATE: 5/6/20
STARTING TIME: 3:00

TIME	DEPTH
0 MIN	0.72'
5 MIN	0.85'
10 MIN	0.89'
15 MIN	0.92'
20 MIN	0.95'
25 MIN	0.98'
30 MIN	1.01'
40 MIN	1.07'
50 MIN	1.11'
60 MIN	1.15'

SEEPAGE RATE: 1"/20 MIN

LOT #8

TEST HOLE #29
0"–14" DARK BROWN TOPSOIL
14"–36" BROWN LOAM, WITH TRACE TO LITTLE GRAVEL
36"–96" GLACIAL TILL, TRACE TO LITTLE SAND AND GRAVEL, VERY COMPACT, TRACE TO FEW COBBLES, TRACE TO FEW STONES

ROOTS: 6'
GROUNDWATER: NONE
LEDGE: NONE
MOTTLING: NONE
COMMENTS: MOTLE AT 36'

TEST HOLE #31
0"–14" DARK BROWN TOPSOIL
14"–33" BROWN LOAM, WITH TRACE TO LITTLE GRAVEL
33"–94" GLACIAL TILL, TRACE TO LITTLE SAND AND GRAVEL, VERY COMPACT, TRACE TO FEW COBBLES, TRACE TO FEW STONES AND ROCKS AT BOTTOM

ROOTS: NONE
GROUNDWATER: 90'
LEDGE: NONE
MOTTLING: 33'
COMMENTS: SEEP AT 62'

TEST HOLE #43
0"–15" DARK BROWN TOPSOIL
15"–57" BROWN LOAM
57"–99" TRACE TO LITTLE AND FIRM SAND AND GRAVEL, WITH FEW COBBLES AND TRACE TO FEW STONES

ROOTS: 9'
GROUNDWATER: 98'
LEDGE: NONE
MOTTLING: 35'
COMMENTS: NONE

TEST HOLE #44
0"–10" DARK BROWN TOPSOIL
10"–37" BROWN SILTY LOAM
37"–101" FIRM SAND AND GRAVE, COMPACT

ROOTS: 36'
GROUNDWATER: NONE
LEDGE: NONE
MOTTLING: 29'
COMMENTS: NONE

PERCOLATION TEST–TEST HOLE #43
DEPTH: 24"
DATE: 5/6/20
STARTING TIME: 4:15

TIME	DEPTH
0 MIN	0.84'
5 MIN	0.87'
10 MIN	0.89'
15 MIN	0.91'
20 MIN	0.93'
25 MIN	0.95'
30 MIN	0.97'
40 MIN	1.00'
50 MIN	1.03'
60 MIN	1.06'

SEEPAGE RATE: 1"/27 MIN

LOT #9

TEST HOLE #41
0"–8" DARK BROWN TOPSOIL
8"–35" BROWN FIRM LOAM WITH GRAVEL
35"–87" FIRM SAND & GRAVEL

ROOTS: 8'
GROUNDWATER: NONE
LEDGE: NONE
MOTTLING: NONE
COMMENTS: RESTRICTIVE LAYER AT 35'

TEST HOLE #42
0"–4" DARK BROWN TOPSOIL
4"–37" BROWN FIRM LOAM WITH GRAVEL
37"–80" FIRM SAND & GRAVEL

ROOTS: 32'
GROUNDWATER: NONE
LEDGE: NONE
MOTTLING: NONE
COMMENTS: RESTRICTIVE LAYER AT 37'

PERCOLATION TEST–BETWEEN TEST HOLES #41 & #42
DEPTH: 24"
DATE: 5/8/20
STARTING TIME: 1:40

TIME	DEPTH
0 MIN	1.40'
5 MIN	1.52'
10 MIN	1.55'
15 MIN	1.58'
20 MIN	1.60'
25 MIN	1.62'
30 MIN	1.64'
40 MIN	1.67'
50 MIN	1.70'
60 MIN	1.73'

SEEPAGE RATE: 1"/27 MIN

OPEN SPACE

PERCOLATION TEST–DETENTION BASIN, 40 FEET FROM STONEWALL AND 5 FEET FROM TH #D7
DEPTH: 30"
DATE: 11/4/19
STARTING TIME: 4:10

TIME	DEPTH
0 MIN	1.08'
5 MIN	1.18'
10 MIN	1.25'
15 MIN	1.31'
20 MIN	1.35'
25 MIN	1.38'
30 MIN	1.43'
40 MIN	1.47'
50 MIN	1.50'
60 MIN	1.54'

SEEPAGE RATE: 1"/21 MIN

PERCOLATION TEST–DETENTION BASIN, 30 FEET NORTH AND EAST TO TH #D7
DEPTH: 18"
DATE: 11/4/19
STARTING TIME: 4:10

TIME	DEPTH
0 MIN	0.63'
5 MIN	0.68'
10 MIN	0.73'
15 MIN	0.76'
20 MIN	0.78'
25 MIN	0.80'
30 MIN	0.82'
40 MIN	0.84'
50 MIN	0.86'
60 MIN	0.88'

SEEPAGE RATE: 1"/42 MIN

TESTING PERFORMED BY DYMAR, ON OCTOBER 21, 2016, 128 BAYBERRY LANE, WESTPORT, CT JOB #934

TEST HOLE #D–1
0"–9" DARK BROWN SILT LOAM TOPSOIL
9"–30" LIGHT BROWN TO ORANGE BROWN LOAM TO VERY FINE SANDY LOAM W/ TRACE FINE TO MEDIUM GRAVEL, TRACE BROKEN STONE, FIRM TO FRIABLE IN PLACE TO VERY FRIABLE IN HAND, SUBANGULAR BLOCKY AND DRY
30"–96" BROWN TO OLIVE BROWN – MASSIVE STRUCTURE – FIRM COMPACTED SILTY GRANULAR TILL, NESTED WITH SHARP ANGULAR STONE AND MICA SCHIST, LITTLE FINE TO MEDIUM SAND, LITTLE SILT AND TRACE 3–6 INCH COBBLES; VERY FIRM TO FIRM IN PLACE AND FRIABLE TO VERY FRIABLE IN HAND, SUBANGULAR TO ANGULAR STRUCTURE.

ROOTS: NONE
WATER: NONE
LEDGE: NONE
MOTTLING: 56", FINE TO MEDIUM AND STRONG
NOTE: FEW MOTTLES IN B HORIZON CONCENTRATED IN TIGHTER SOILS, IRON STAINING.

TEST HOLE #D–2
0"–9" DARK BROWN SILT LOAM TOPSOIL
09"–34" LIGHT BROWN TO LIGHT ORANGE FINE SANDY LOAM W/ TRACE FINE TO COARSE GRAVEL, TRACE BROKEN MICA SCHIST STONE, FIRM TO FRIABLE IN PLACE TO VERY FRIABLE IN HAND, SUBANGULAR BLOCKY AND DRY
34"–102" DARK BROWN TO OLIVE BROWN – MASSIVE STRUCTURE – FIRM COMPACTED SILTY GRANULAR TILL, NESTED WITH SHARP ANGULAR STONE AND MICA SCHIST, LITTLE FINE TO MEDIUM SAND, LITTLE SILT AND TRACE 3–6 INCH COBBLES; VERY FIRM TO FIRM IN PLACE AND FRIABLE TO VERY FRIABLE IN HAND, SUBANGULAR TO ANGULAR STRUCTURE.

ROOTS: NONE
WATER: NONE
LEDGE: NONE
MOTTLING: 48", DIFFICULT TO CONFIRM DUE TO MASSIVE STRUCTURE

TEST HOLE #D–3
0"–9" DARK BROWN SILT LOAM TOPSOIL
9"–50" LIGHT BROWN TO OLIVE BROWN VERY FINE GRANULAR TILL WITH LITTLE FINE TO COARSE GRAVEL, LITTLE SILT, VERY FIRM TO FIRM IN PLACE TO FIRM TO FRIABLE IN HAND, SUBANGULAR BLOCKY AND DRY
50"–62" LIGHT BROWN TO YELLOW BROWN POORLY GRADED MEDIUM SAND, HEAVILY IRON STAINED, FIRM IN PLACE TO LOOSE IN HAND, GRANULAR AND DRY
62"–78" LIGHT BROWN TO OLIVE BROWN POORLY GRADED VERY FINE SAND WITH TRACE SILT, HEAVILY MOTTLED, FIRM TO FRIABLE IN PLACE AND LOOSE IN HAND, DRY
78"–90" ORANGE BROWN TO OLIVE BROWN FIRM GRANULAR TILL, LITTLE FINE TO COARSE GRAVEL, LITTLE COBBLES, VERY FIRM IN PLACE AND FRIABLE IN HAND, DRY

ROOTS: 18"
WATER: NONE
LEDGE: NONE
MOTTLING: DISTINCT AT 64"
COMMENTS: MOTTLING IS HEAVY AND LIKELY DUE TO BEING TRAPPED BELOW THE B HORIZON BEING TIGHT SOILS ABOVE; SOUTH END OF THE DEEPER SAND DEPOSIT

TEST HOLE #D–4
0"–9" DARK BROWN SILT LOAM TOPSOIL
9"–32" LIGHT BROWN TO LIGHT ORANGE FINE SANDY LOAM W/ TRACE FINE TO COARSE GRAVEL, TRACE BROKEN MICA SCHIST STONE, FIRM TO FRIABLE IN PLACE TO VERY FRIABLE IN HAND, SUBANGULAR BLOCKY AND DRY
32"–44" BROWN FRIABLE MASSIVE FRIABLE TILL WITH SOME ROUNDED FINE TO COARSE GRAVEL, TRACE COBBLES; FIRM TO FRIABLE IN PLACE, FRIABLE IN HAND, GRANULAR TO SUBANGULAR BLOCKY, DRY
44"–88" BROWN TO OLIVE BROWN – MASSIVE STRUCTURE – FIRM COMPACTED SILTY GRANULAR TILL, NESTED WITH SHARP ANGULAR STONE AND MICA SCHIST, LITTLE FINE TO MEDIUM SAND, LITTLE SILT AND TRACE 3–6 INCH COBBLES; VERY FIRM TO FIRM IN PLACE AND FRIABLE TO VERY FRIABLE IN HAND, SUBANGULAR TO ANGULAR STRUCTURE.

ROOTS: TO 32", FINE
WATER: NONE
LEDGE: NONE
MOTTLING: 72" STRONG AND COARSE

TEST HOLE #D–5
0"–8" DARK BROWN SILT LOAM TOPSOIL
8"–32" LIGHT BROWN TO ORANGE BROWN SILT LOAM W/ TRACE FINE TO MEDIUM SAND, VERY FIRM TO FIRM IN PLACE, FRIABLE IN HAND, SUBANGULAR BLOCKY AND DRY
32"–96" BROWN TO OLIVE BROWN – MASSIVE STRUCTURE – FIRM COMPACTED FINE SILTY GRANULAR TILL, TRACE FINE TO MEDIUM GRAVEL, TRACE MEDIUM TO COARSE GRAVEL, TRACE COBBLES; VERY FIRM TO FIRM IN PLACE AND FRIABLE IN HAND, SUBANGULAR TO ANGULAR STRUCTURE.

ROOTS: NONE
WATER: NONE
LEDGE: NONE
MOTTLING: 48"
COMMENTS: RELATIVELY TIGHT SOIL

TEST HOLE #D–6
0"–12" DARK BROWN SILT LOAM TOPSOIL
8"–32" LIGHT BROWN TO ORANGE BROWN VERY FINE SANDY SILT LOAM W/ TRACE GRAVEL, VERY FIRM TO FIRM IN PLACE, FRIABLE IN HAND, SUBANGULAR BLOCKY AND DRY
32"–96" BROWN TO OLIVE BROWN FIRM COMPACTED FINE SILTY GRANULAR TILL, VERY FIRM TO FIRM IN PLACE AND FRIABLE IN HAND, SUBANGULAR TO ANGULAR STRUCTURE.

ROOTS: NONE
WATER: NONE
LEDGE: NONE
MOTTLING: 56", COARSE AND STRONG
COMMENTS: RELATIVELY TIGHT SOIL

TEST HOLE #D–7
0"–14" DARK BROWN SILT LOAM TOPSOIL
14"–39" LIGHT BROWN TO ORANGE BROWN VERY FINE SANDY SILT LOAM W/ TRACE GRAVEL, VERY FIRM TO FIRM IN PLACE, FRIABLE IN HAND, SUBANGULAR BLOCKY AND DRY
39"–87" BROWN TO OLIVE BROWN FIRM COMPACTED FINE SILTY GRANULAR TILL, VERY FIRM TO FIRM IN PLACE AND FRIABLE IN HAND, SUBANGULAR TO ANGULAR STRUCTURE.

ROOTS: NONE
WATER: NONE
LEDGE: NONE
MOTTLING: 83", COARSE AND STRONG

TEST HOLE #D–8
0"–12" DARK BROWN LOAM TOPSOIL
12"–34" BROWN TO ORANGE BROWN VERY FINE SANDY SILT LOAM W/ TRACE GRAVEL, VERY FIRM TO FIRM IN PLACE, FRIABLE IN HAND, SUBANGULAR BLOCKY AND DRY
34"–96" BROWN TO OLIVE BROWN FIRM COMPACTED FINE SANDY GRANULAR TILL WITH TRACE FINE TO MEDIUM GRAVEL VERY FIRM TO FIRM IN PLACE AND FRIABLE IN HAND, SUBANGULAR TO ANGULAR STRUCTURE.

ROOTS: NONE
WATER: NONE
LEDGE: NONE
MOTTLING: 56", COARSE AND STRONG
COMMENTS: RELATIVELY TIGHT SOIL

TESTING PERFORMED BY DYMAR, ON MARCH 9, 2020, 128 BAYBERRY LANE, WESTPORT, CT JOB #934

TEST HOLE DPW #1
0"–15" DARK BROWN TOPSOIL
15"–40" BROWN LOAM, SILTY
40"–72" SILTY SAND, TRACE GRAVEL, FEW COBBLES

ROOTS: NONE
WATER: 42"
LEDGE: NONE
MOTTLING: NONE
COMMENTS: NONE

TEST HOLE DPW #2
0"–18" DARK BROWN TOPSOIL
18"–36" BROWN LOAM, SILTY
36"–82" FINE TO MEDIUM SAND, SILTY

ROOTS: NONE
WATER: NONE
LEDGE: NONE
MOTTLING: 80"
COMMENTS: POSSIBLE LEDGE AT 80"±

TEST HOLE DPW #3
0"–14" DARK BROWN TOPSOIL
14"–40" LIGHT BROWN, SILTY
40"–84" DARK RED FINE TO MEDIUM SAND, SILTY

ROOTS: NONE
WATER: NONE
LEDGE: NONE
MOTTLING: NONE
COMMENTS: NONE

TEST HOLE DPW #4
0"–14" DARK BROWN TOPSOIL
14"–33" LIGHT BROWN LOAM SAND AND SILT
33"–74" BROWN COARSE SAND

ROOTS: NONE
WATER: NONE
LEDGE: NONE
MOTTLING: NONE
COMMENTS: NONE

TEST HOLE DPW #5
0"–17" DARK BROWN TOPSOIL
17"–33" LIGHT BROWN LOAM, SILTY
33"–46" DARK BROWN COARSE SAND SILTY, TRACE GRAVEL, FEW COBBLES
46"–72" DARK GRAY FINE TO COARSE SAND

ROOTS: NONE
WATER: NONE
LEDGE: NONE
MOTTLING: NONE
COMMENTS: NONE

TEST HOLE DPW #6
0"–22" DARK BROWN TOPSOIL
22"–60" DARK BROWN SILTY SAND

ROOTS: NONE
WATER: NONE
LEDGE: NONE
MOTTLING: NONE
COMMENTS: NONE

TEST HOLE DPW #7
0"–20" DARK BROWN TOPSOIL
20"–82" BROWN SILTY SAND, TRACE GRAVEL, FEW COBBLES

ROOTS: NONE
WATER: NONE
LEDGE: NONE
MOTTLING: NONE
COMMENTS: NONE

MLSS Calculations:

Building Number	Single or Multi-family	Prop # of Bedrooms	Test Hole Numbers	PRIMARY Perc Rate	PRIMARY Hydraulic Gradient	PRIMARY Depth to Restrictive Layer	PRIMARY Hydraulic Factor	PRIMARY Flow Factor	PRIMARY Perc. Factor	PRIMARY MLSS	RESERVE Perc Rate	RESERVE Hydraulic Gradient	RESERVE Depth to Restrictive Layer	RESERVE Hydraulic Factor	RESERVE Flow Factor	RESERVE Perc. Factor	RESERVE MLSS
			#	(min./in.)	(% of slope)	(inches)	(HF)	(FF)	(PF)	(ft)	(min./in.)	(% of slope)	(inches)	(HF)	(FF)	(PF)	(ft)
1	S	5	5,7,101,102,200	27	4.4	32	28	2.00	1.5	84.0	27	4.4	32	28	2.00	1.5	84.0
2	S	5	9,10,11,201	27	5.7	31	28	2.00	1.5	84.0	27	5.7	31	28	2.00	1.5	84.0
3	S	5	13,15,202,203	17	6.4	72	18	2.00	1.3	No MLSS	17	6.4	72	18	2.00	1.3	No MLSS
4	S	5	20,103,104,106,204	21	10.1	82	14	2.00	1.5	No MLSS	21	10.1	82	14	2.00	1.5	No MLSS
5	S	5	21,24,205,206	20	10.0	27	26	2.00	1.3	65.0	20	10.0	27	26	2.00	1.3	65.0
6	S	5	26-28,109	28	9.4	24	28	2.00	1.5	84.0	28	9.4	24	28	2.00	1.5	84.0
7	S	5	33-36	20	7.8	31	26	2.00	1.3	65.0	20	7.8	31	26	2.00	1.3	65.0
8	S	5	43,44	27	3.9	35	30	2.00	1.5	90.0	27	3.9	35	30	2.00	1.5	90.0
9	S	5	41,42	27	6.2	35	26	2.00	1.5	78.0	27	6.2	35	26	2.00	1.5	78.0
Total		45															

Subsurface Sewage Disposal System Calculations

Lot #	# Bdrms	Perc Rate (min./in.)	Effective Area (sft)	Load Factor	Proposed Septic System	Application Rate (sft/LF)	LF of Trench Required (feet)	MLSS (LF)	Prop # of Rows Long	Prop # of Rows Short	Total Length per row Long (LF)	Total Length per row Short (LF)	LF of Trench Proposed (LF)	Depth to High Water Elev. (inch)	Depth to Hard Pan/ Ledge (inch)	Height of Fill (if required) (ft)	Height of Fill (if required) (ft)
PRIMARY																Based on high GW	Based on Ledge
1	5	27	1000	H10	F	11	90.91	84.0	1	1	50.00	50.00	100.00	32	none	1.33	0.00
2	5	27	1000	H10	F	11	90.91	84.0	1	1	50.00	45.00	95.00	31	none	1.42	0.00
3	5	17	900	H10	F	11	81.82	No MLSS	1	1	40.00	45.00	85.00	none	none	0.00	0.00
4	5	21	1000	H10	F	11	90.91	No MLSS	1	1	50.00	50.00	100.00	none	none	0.00	0.00
5	5	20	900	H10	F	11	81.82	65.0	1	1	45.00	45.00	90.00	27	none	1.75	0.00
6	5	28	1000	H10	F	11	90.91	84.0	1	1	50.00	50.00	100.00	29	none	1.58	0.00
7	5	20	900	H10	F	11	81.82	65.0	1	1	45.00	45.00	90.00	31	none	1.42	0.00
8	5	27	1000	H10	F	11	90.91	90.0	1	1	50.00	50.00	100.00	35	none	1.08	0.00
9	5	27	1000	H10	F	11	90.91	78.0	1	1	50.00	50.00	100.00	35	none	1.08	0.00
RESERVE																	
1	5	27	1000	H10	F	11	90.91	84.0	1	1	50.00	50.00	100.00	32	none	1.33	0.00
2	5	27	1000	H10	F	11	90.91	84.0	1	1	50.00	45.00	95.00	31	none	1.42	0.00
3	5	17	900	H10	F	11	81.82	No MLSS	1	1	40.00	45.00	85.00	none	none	0.00	0.00
4	5	21	1000	H10	F	11	90.91	No MLSS	1	1	50.00	50.00	100.00	none	none	0.00	0.00
5	5	20	900	H10	F	11	81.82	65.0	1	1	45.00	45.00	90.00	27	none	1.75	0.00
6	5	28	1000	H10	F	11	90.91	84.0	1	1	50.00	50.00	100.00	29	none	1.58	0.00
7	5	20	900	H10	F	11	81.82	65.0	1	1	45.00	45.00	90.00	31	none	1.42	0.00
8	5	27	1000	H10	F	11	90.91	90.0	1	1	50.00	50.00	100.00	35	none	1.08	0.00
9	5	27	1000	H10	F	11	90.91	78.0	1	1	50.00	50.00	100.00	35	none	1.08	0.00

System Types

		Application Rate (sft/LF)	Min. Cover H-10 (inches)	H-20 (inches)	System Height (inches)
Infiltrator Sidewinders - High Capacity	A	3.9	12	18	16.0
12" High Gallery - Plastic Chambers (side-by-side)	B	5.9	12	18	12.0
Infiltrator Quick 4 - High Capacity (w/ stone)	C	4.1	12	18	16.0
Cultec 330	D	7.4	12	18	26.5
Cultec 180	E	4.4	12	18	20.5
Mantis 536-8	F	11	12	12	18.0

NOTE:
1. THE CONTRACTOR SHALL NOTIFY "CALL BEFORE YOU DIG" AT LEAST 72 HOURS PRIOR TO THE START OF EXCAVATION, BY CALLING 1–800–922–4455.

NO.	DATE	REVISION DESCRIPTION	DRAWN BY	CHECKED BY

COPYRIGHT © 2020 THESE PLANS ARE THE PROPERTY OF DYMAR, PREPARED AS AN INSTRUMENT OF SERVICE FOR USE ON THE PROJECT DESCRIBED HEREIN. REPRODUCTION OF THESE PLANS IS RESTRICTED TO USE ON THE PROJECT. DYMAR DOES NOT GUARANTEE THESE PLANS TO REFLECT THE TRUE CONDITIONS. THE CONTRACTOR SHALL VERIFY ALL FIELD CONDITIONS AND DIMENSIONS AND IS RESPONSIBLE FOR NOTIFYING DYMAR IF A DISCREPANCY EXISTS. THERE AFTER DYMAR SHALL HAVE FINAL SAY.

DYMAR
800 Main Street South · Southbury, Ct. 06488 · (203) 267-1046 · Fax (203) 267-1547
ENGINEERING · PLANNING · SURVEYING · DEVELOPMENT SERVICES

DRAWINGS TO BE USED FOR LAND USE SUBMISSIONS ONLY
NOT FOR CONSTRUCTION

CLIENT: Estate of Dina M. & James S. Belta
128 Bayberry Lane
Westport, Connecticut 06880

PROJECT: Open Space Residential Subdivision
128 Bayberry Lane
Westport, Connecticut 06880

TITLE: Test Hole Data & Septic System Feasibility Data

NOT VALID WITHOUT SIGNATURE AND ORIGINAL SEAL

MARK E. LANCOR, P.E. #12369

1 2

DATE: 05/14/2020
SCALE: N.T.S.
DESIGNED BY: M.E.L.
DRAWN BY: C.B.B.
CHECKED BY: M.E.L.
JOB NO: 00934
DRAWING NO: C-5D

F:\00934 - Bayberry Lane-Westport\Civil\Dwg\005D.dwg, 5D, 5/13/2020 12:22:27 PM, gemax, AutoCAD PDF (Web and Mobile).pc3, ARCH full bleed D (24.00 x 36.00 Inches), 1:1

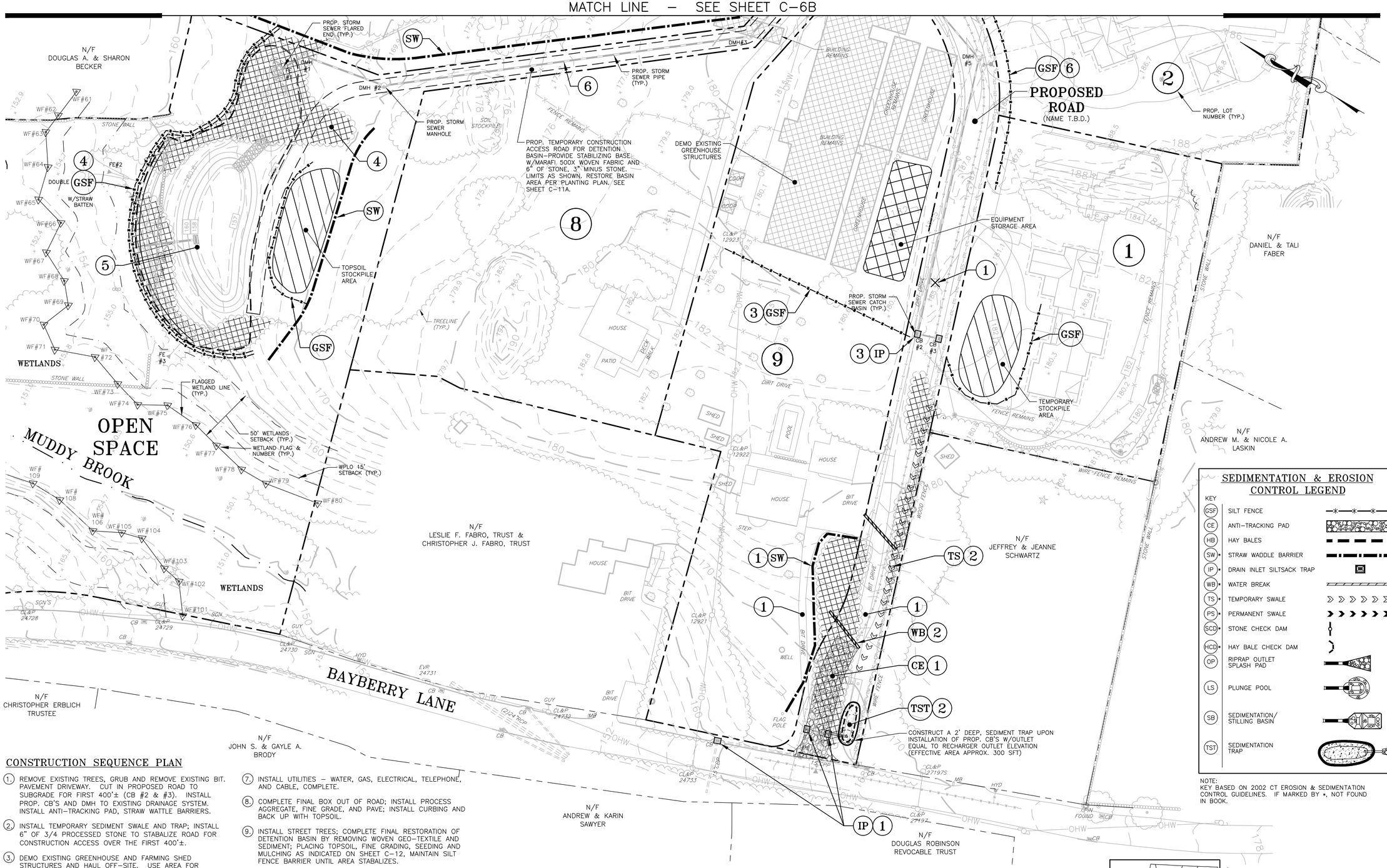

SEDIMENTATION & EROSION CONTROL LEGEND

KEY	
GSF	SILT FENCE
CE	ANTI–TRACKING PAD
HB	HAY BALES
SW*	STRAW WADDLE BARRIER
IP*	DRAIN INLET SILTSACK TRAP
WB*	WATER BREAK
TS*	TEMPORARY SWALE
PS*	PERMANENT SWALE
SCD*	STONE CHECK DAM
HCD*	HAY BALE CHECK DAM
OP	RIPRAP OUTLET SPLASH PAD
LS	PLUNGE POOL
SB	SEDIMENTATION/ STILLING BASIN
TST	SEDIMENTATION TRAP

NOTE:
KEY BASED ON 2002 CT EROSION & SEDIMENTATION CONTROL GUIDELINES. IF MARKED BY *, NOT FOUND IN BOOK.

CONSTRUCTION SEQUENCE PLAN

1. REMOVE EXISTING TREES, GRUB AND REMOVE EXISTING BIT. PAVEMENT DRIVEWAY. CUT IN PROPOSED ROAD TO SUBGRADE FOR FIRST 400'± (CB #2 & #3). INSTALL PROP. CB'S AND DMH TO EXISTING DRAINAGE SYSTEM. INSTALL ANTI–TRACKING PAD, STRAW WATTLE BARRIERS.
2. INSTALL TEMPORARY SEDIMENT SWALE AND TRAP; INSTALL 6" OF 3/4 PROCESSED STONE TO STABALIZE ROAD FOR CONSTRUCTION ACCESS OVER THE FIRST 400'±.
3. DEMO EXISTING GREENHOUSE AND FARMING SHED STRUCTURES AND HAUL OFF–SITE. USE AREA FOR CONSTRUCTION EQUIPMENT STAGING AREA.
4. REMOVE EXISTING TREES & GRUB FOR DETENTION BASIN; REMOVE & STOCKPILE EXISTING STONEWALL FOR REUSE. STRIP TOPSOIL & STOCKPILE. INSTALL SEDIMENTATION & EROSION CONTROLS; AND MAINTAIN UNTIL FINAL RESTORATION.
5. COMPLETE DETENTION BASIN TO FINAL SUBGRADE AND INSTALL WOVEN GEOTEXTILE FABRIC LINER AT SUBGRADE,
6. REMOVE/RELOCATE EXISTING STOCKPILE FOR REUSE. COMPLETE STORM DRAINAGE SYSTEM FROM FE#1 TO DMH#4; COMPLETE ROAD EARTHWORK CUTS & FILLS TO SUBGRADE FROM STA 14+00 TO STA 19+58; COMPLETE REMAINING DRAINAGE SYSTEM, INCLUDING REQUIRED FOOTING DRAIN CONNECTIONS TO SERVE LOTS 1 & 2. STUB AT STREET LINE.
7. INSTALL UTILITIES – WATER, GAS, ELECTRICAL, TELEPHONE, AND CABLE, COMPLETE.
8. COMPLETE FINAL BOX OUT OF ROAD; INSTALL PROCESS AGGREGATE, FINE GRADE, AND PAVE; INSTALL CURBING AND BACK UP WITH TOPSOIL.
9. INSTALL STREET TREES; COMPLETE FINAL RESTORATION OF DETENTION BASIN BY REMOVING WOVEN GEO–TEXTILE AND SEDIMENT; PLACING TOPSOIL, FINE GRADING, SEEDING AND MULCHING AS INDICATED ON SHEET C–12, MAINTAIN SILT FENCE BARRIER UNTIL AREA STABALIZES.
10. INSPECT STORM SYSTEM UPON SITE STABALIZATION; REMOVE SEDIMENTATION AND EROSION CONTROLS, VACUUM ALL CB SUMPS.
11. SET PINS AND MONUMENTS. PROVIDE RECORD AS–BUILT TO TOWN WITH APPLICABLE CERTIFICATIONS.
12. AS A GENERAL NOTE: MONITOR SEDIMENTATION AND EROSION CONTROLS WEEKLY BY AN APPROVED SITE MONITOR AND PROVIDE REPORT TO REQUIRED TOWN OFFICIALS; STREET SWEEP BAYBERRY LANE DAILY.

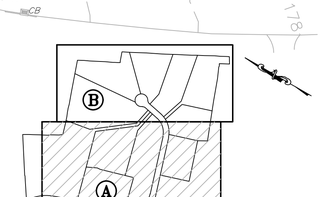

KEY PLAN

SCALE:1"=500'

NOTE:
1. THE CONTRACTOR SHALL NOTIFY "CALL BEFORE YOU DIG" AT LEAST 72 HOURS PRIOR TO THE START OF EXCAVATION, BY CALLING 1–800–922–4455.

NO.	DATE	REVISION DESCRIPTION	DRAWN BY	CHECKED BY

COPYRIGHT © 2020. THESE PLANS ARE THE PROPERTY OF DYMAR, PREPARED AS AN INSTRUMENT OF SERVICE. PROPOSED USE OF THESE PLANS IS RESTRICTED TO THE ORIGINAL SITE FOR WHICH THEY WERE PREPARED, PUBLICATION OF THESE PLANS FOR ANY OTHER PROJECT, DYMAR DOES NOT GUARANTEE THESE PLANS TO REFLECT THE TRUE CONDITIONS. THE CONTRACTOR SHALL VERIFY ALL FIELD CONDITIONS AND DIMENSIONS AND IS RESPONSIBLE FOR NOTIFYING DYMAR IF A DISCREPANCY EXISTS. THERE AFTER, DYMAR SHALL WAIVE FINAL SIGN.

DYMAR
800 Main Street South · Southbury, Ct. 06488 · (203) 267–1046 · Fax (203) 267–1547
ENGINEERING · PLANNING · SURVEYING · DEVELOPMENT SERVICES

DRAWINGS TO BE USED FOR LAND USE SUBMISSIONS ONLY
NOT FOR CONSTRUCTION

CLIENT: Estate of Dina M. & James S. Belta
128 Bayberry Lane
Westport, Connecticut 06880

PROJECT: Open Space Residential Subdivision
128 Bayberry Lane
Westport, Connecticut 06880

TITLE: Phase 1 – Road and Infrastructure Sediment and Erosion Control Plan

NOT VALID WITHOUT SIGNATURE AND ORIGINAL SEAL

MARK E. LANCOR, P.E. #12369

DATE:	05/14/2020
SCALE:	1"=40'
DESIGNED BY:	M.E.L.
DRAWN BY:	C.B.B.
CHECKED BY:	M.E.L.
JOB NO.:	00934
DRAWING NO.:	C–6A

F:\00934 - Bayberry Lane-Westport\Civil\Dwg\006.dwg, BA, 5/13/2020 12:22:29 PM, genius, AutoCAD PDF (Web and Mobile).pc3, ARCH full bleed D (24.00 x 36.00 Inches), 1:1

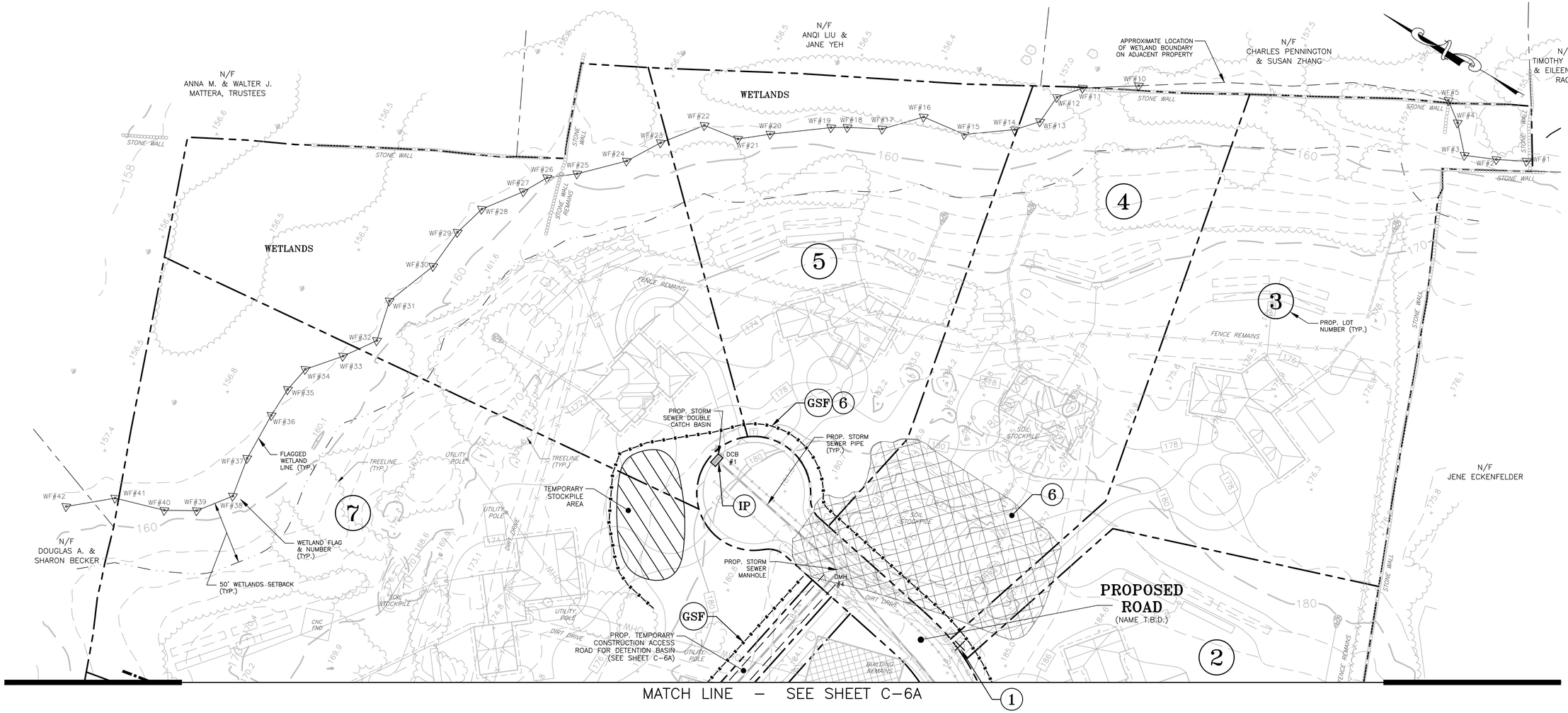

MATCH LINE – SEE SHEET C-6A

SEDIMENTATION & EROSION CONTROL LEGEND

KEY	
GSF	SILT FENCE
CE	ANTI-TRACKING PAD
HB	HAY BALES
SW*	STRAW WADDLE BARRIER
IP*	DRAIN INLET SILTSACK TRAP
WB*	WATER BREAK
TS*	TEMPORARY SWALE
PS*	PERMANENT SWALE
SCD*	STONE CHECK DAM
HCD*	HAY BALE CHECK DAM
OP	RIPRAP OUTLET SPLASH PAD
LS	PLUNGE POOL
SB	SEDIMENTATION/ STILLING BASIN
TST	SEDIMENTATION TRAP

NOTE:
KEY BASED ON 2002 CT EROSION & SEDIMENTATION CONTROL GUIDELINES. IF MARKED BY *, NOT FOUND IN BOOK.

CONSTRUCTION SEQUENCE PLAN

1. REMOVE EXISTING TREES, GRUB AND REMOVE EXISTING BIT. PAVEMENT DRIVEWAY. CUT IN PROPOSED ROAD TO SUBGRADE FOR FIRST 400'± (CB #2 & #3). INSTALL PROP. CB'S AND DMH TO EXISTING DRAINAGE SYSTEM. INSTALL ANTI-TRACKING PAD, STRAW WATTLE BARRIERS.
2. INSTALL TEMPORARY SEDIMENT SWALE AND TRAP; INSTALL 6" OF 3/4 PROCESSED STONE TO STABALIZE ROAD FOR CONSTRUCTION ACCESS OVER THE FIRST 400'±.
3. DEMO EXISTING GREENHOUSE AND FARMING SHED STRUCTURES AND HAUL OFF-SITE. USE AREA FOR CONSTRUCTION EQUIPMENT STAGING AREA.
4. REMOVE EXISTING TREES & GRUB FOR DETENTION BASIN; REMOVE & STOCKPILE EXISTING STONEWALL FOR REUSE. STRIP TOPSOIL & STOCKPILE. INSTALL SEDIMENTATION & EROSION CONTROLS; AND MAINTAIN UNTIL FINAL RESTORATION.
5. COMPLETE DETENTION BASIN TO FINAL SUBGRADE AND INSTALL WOVEN GEOTEXTILE FABRIC LINER AT SUBGRADE,
6. REMOVE/RELOCATE EXISTING STOCKPILE FOR REUSE. COMPLETE STORM DRAINAGE SYSTEM FROM FE#1 TO DMH#4; COMPLETE ROAD EARTHWORK CUTS & FILLS TO SUBGRADE FROM STA 14+00 TO STA 19+58; COMPLETE REMAINING DRAINAGE SYSTEM, INCLUDING REQUIRED FOOTING DRAIN CONNECTIONS TO SERVE LOTS 1 & 2. STUB AT STREET LINE.
7. INSTALL UTILITIES – WATER, GAS, ELECTRICAL, TELEPHONE, AND CABLE, COMPLETE.
8. COMPLETE FINAL BOX OUT OF ROAD; INSTALL PROCESS AGGREGATE, FINE GRADE, AND PAVE; INSTALL CURBING AND BACK UP WITH TOPSOIL.
9. INSTALL STREET TREES; COMPLETE FINAL RESTORATION OF DETENTION BASIN BY REMOVING WOVEN GEO-TEXTILE AND SEDIMENT; PLACING TOPSOIL, FINE GRADING, SEEDING AND MULCHING AS INDICATED ON SHEET C-12, MAINTAIN SILT FENCE BARRIER UNTIL AREA STABALIZES.
10. INSPECT STORM SYSTEM UPON SITE STABALIZATION; REMOVE SEDIMENTATION AND EROSION CONTROLS, VACUUM ALL CB SUMPS.
11. SET PINS AND MONUMENTS. PROVIDE RECORD AS-BUILT TO TOWN WITH APPLICABLE CERTIFICATIONS.
12. AS A GENERAL NOTE: MONITOR SEDIMENTATION AND EROSION CONTROLS WEEKLY BY AN APPROVED SITE MONITOR AND PROVIDE REPORT TO REQUIRED TOWN OFFICIALS; STREET SWEEP BAYBERRY LANE DAILY.

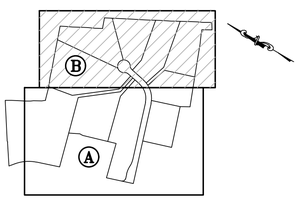

KEY PLAN

SCALE:1"=500'

NOTE:
1. THE CONTRACTOR SHALL NOTIFY "CALL BEFORE YOU DIG" AT LEAST 72 HOURS PRIOR TO THE START OF EXCAVATION, BY CALLING 1-800-922-4455.

REVISION				
NO.	DATE	DESCRIPTION	DRAWN BY	CHECKED BY

COPYRIGHT © 2020. THESE PLANS ARE THE PROPERTY OF DYMAR, PREPARED AS AN INSTRUMENT OF SERVICE. THIS PROPOSAL HAS BEEN PREPARED BASED ON INFORMATION PROVIDED BY OTHERS AT THE TIME OF THIS PROJECT. DYMAR DOES NOT GUARANTEE THESE PLANS TO REFLECT THE TRUE CONDITIONS. THE CONTRACTOR SHALL VERIFY ALL FIELD CONDITIONS AND DIMENSIONS AND IS RESPONSIBLE FOR NOTIFYING DYMAR IF A DISCREPANCY EXISTS. THERE AFTER, DYMAR SHALL HAVE FINAL SAY.

DYMAR
800 Main Street South · Southbury, Ct. 06488 · (203) 267-1546 · Fax (203) 267-1547
ENGINEERING · PLANNING · SURVEYING · DEVELOPMENT SERVICES

DRAWINGS TO BE USED FOR LAND USE SUBMISSIONS ONLY
NOT FOR CONSTRUCTION

CLIENT: Estate of Dina M. & James S. Belta
128 Bayberry Lane
Westport, Connecticut 06880

PROJECT: Open Space Residential Subdivision
128 Bayberry Lane
Westport, Connecticut 06880

TITLE: Phase 1 – Road and Infrastructure Sediment and Erosion Control Plan

NOT VALID WITHOUT SIGNATURE AND ORIGINAL SEAL

MARK E. LANCOR, P.E. #12369

1 | 2

DATE:	05/14/2020
SCALE:	1"=40'
DESIGNED BY:	M.E.L.
DRAWN BY:	C.B.B.
CHECKED BY:	M.E.L.
JOB NO:	00934
DRAWING NO:	C-6B

F:\00934 - Bayberry Lane-Westport\Civil\Dwg\006.dwg, 6B, 5/13/2020 12:22:30 PM, gemus, AutoCAD PDF (Web and Mobile).pc3, ARCH full bleed D (24.00 x 36.00 Inches), 1:1

EROSION AND SEDIMENT CONTROL PLAN

A. PROJECT NARRATIVE:

1. The project is a proposed 9 lot open space subdivision situated on 23± acres. The subdivision has been designed in accordance with the Town's inland wetlands and watercourses regulations and subdivision regulations as well as other documents published by the CT DEEP and the CT DOT.

2. The infrastructure includes 944± LF of road with drainage, one detention and water quality basin and underground utilities. Lots will be served by a private sanitary sewer septic systems.

3. The street drainage collection system was designed for a minimum 10 year storm event. All detention basins are sized to provide a maximum 24–30 hour retention time for water quality treatment of storm water based on a NCRS TR–55, Type III Rainfall Distribution. Hydrological Design is for 100 year storm provided with an emergency spillway. Capacity of collection system is based on a rational method flow, 10 year storm event.

4. Project construction phasing – Refer to Sheet C–6(A&B).

5. There are no regulated wetland activities.

6. Total Estimated Site Disturbance is 8.9 ac± (Includes development of all building lots.)

7. Sequence of Construction Phasing Schedule – Refer to Section 'D' of this sheet for General Terms and practices for Erosion and Sediment Control measures.

8. Reference is made to Sheets C–6E for the use of temporary Erosion and Sediment Control devices, their design criteria, and maintenance thereof.

B. PRINCIPLES:

The following general principles shall be maintained as an effective means of minimizing erosion and sedimentation during the development process.

1. Stripping away of vegetation, regrading or other development shall be done in such a way as to minimize erosion.

2. Grading and development plans shall preserve salient natural features, keep cut and fill operations to a minimum, and insure conformity with topography so as to create the least erosion potential and adequately handle the volume and velocity of surface water runoff.

3. Whenever feasible, natural vegetation shall be retained, protected and supplemented wherever indicated on the site development plan and/or the landscaping plan. Trees which are shown to remain shall be protected throughout the construction period and any damages caused by the CONTRACTOR shall be repaired immediately. Whenever trees are cut beyond the contract limit lines or if a tree cannot be saved due to the CONTRACTOR'S actions, due compensation shall be granted to the OWNER equal to or exceeding the value of the loss. No work shall proceed after damages have occurred until the OWNER has agreed to a remediation plan.

4. The disturbed area and the duration of exposure shall be kept to a practical minimum.

5. Disturbed soils shall be stabilized as quickly as possible.

6. Temporary vegetation and/or mulching shall be used to protect exposed critical areas and stockpiles during development when expected to be exposed in excess of fifteen (15) days.

7. The permanent (final) vegetation and mechanical erosion control measures shall be installed as soon as practical during construction.

8. Sediment in the runoff water shall be trapped until the disturbed areas are stabilized by the use of debris basins, sediment basins, silt traps or similar measures.

9. All lots, tracts or developments shall be finally graded to provide proper drainage away from buildings and dispose of it without ponding: and all land within a development shall be graded to drain and dispose of surface water without ponding.

10. Where drainage swales are used to divert surface waters away from buildings, they shall be sodded or planted.

11. Concentration of surface runoff shall be only permitted by piping and through drainage swales reinforced with structural protective measures or natural watercourses.

12. Excavation and Fills:

    a. Slopes created by cuts or fills shall not be steeper than 2:1 unless existing soil conditions are inspected stabilized and shall be reestablished by temporary or permanent measures, as required during the development process.

    b. Adequate provisions shall be made to prevent surface water from damaging the cut face of excavations or the sloping surfaces of fills.

    c. Cut and fills shall not endanger adjoining property.

    d. All fills shall be compacted to provide stability of material and to prevent undesirable settlement. The fill shall be spread in a series of layers each not exceeding loose lifts of twelve (12) inches in thickness and shall be compacted by a sheeps foot roller or other approved method after each layer is spread.

    e. Fills shall not encroach on natural watercourses, constructed channels or regulated flood plain areas, unless permitted by license or permit from authority having jurisdiction.

    f. Fills placed adjacent to natural watercourses, constructed channels or flood plains shall have suitable protection against erosion during periods of flooding.

    g. Grading shall not be done in such a way as to divert water onto the property of another landowner without their expressed written consent.

    h. During grading operations, necessary measures for dust control shall be exercised. Use of chemicals shall be prohibited.

13. Sedimentation and erosion control shall be implemented in accordance with the guidelines for Soil Erosion and Sediment Control, prepared by the State of Connecticut thru the counsel on Soil and Water Conservation, latest revised edition. In addition to defining specific measures and locations for sediment and erosion controls to be used, the plan shall be considered flexible to allow additional controls to be implemented as site conditions change and localized drainage patterns are altered. It is the responsibility of the CONTRACTOR to contact the OWNER for remedial action when site conditions warrant additional protective measures.

C. RESPONSIBILITY FOR THE PLAN:

1. The responsibility for implementing and maintaining the Sedimentation and Erosion Control Plan rests with the OWNER OF RECORD where any development of the parcel gives cause to erosion and sedimentation. It is also to be said that the OWNER OF RECORD shall be held responsible for informing all concerned regarding responsibility of the plan and seeing that the plan becomes a part of the deed in the event the title of the property is transferred. The costs of all drainage erosion and sedimentation control measures will therefore rest with the OWNER OF RECORD.

2. Whenever sedimentation is caused by stripping vegetation and/or grading, it shall be the responsibility of the person, corporation or other entity having responsibility to remove sedimentation from all lower properties, drainage systems and watercourses and to repair any damage at their expense as quickly as possible.

3. Maintenance of all drainage facilities and watercourses within any subdivision or land development shall be the responsibility of the OWNER OF RECORD until they are accepted by the Municipality. All control measures will be maintained in effective condition throughout the construction period. Surface inlets shall be kept open and free of sediment and debris. The system shall be checked after every major storm and sediment shall be disposed of at an approved location consistent with the plan.

4. Maintenance of drainage facilities or watercourses originating and completely on private property shall be the responsibility of the OWNER to their point of open discharge at the property line or at a communal watercourse within the property.

5. No person, corporation or other entity shall block, impede the flow of, alter, construct any structure or deposit any material or thing or commit any act which affects normal or flood flow in any communal stream or watercourse without having obtained prior approval from the Canton Inland Wetland and Watercourse Agency.

6. An adequate right–of–way and/or easement shall be provided for all drainage facilities and watercourses which are proposed either for acceptance by the Municipality or provided by other property owners for the convenience of the OWNER.

D. SEQUENCE OF CONSTRUCTION (GENERAL TERMS)

The tentative sequence of construction events are as follows and activities noted by a "(Capital Letter)" may occur concurrently.

1. Conduct a preconstruction meeting with the OWNER, Contractor, Consultant Team, and Local and State agencies having jurisdiction over the project.

2. Field stakeout the limits of all activities and install, at a minimum, a snow fence along construction limit lines along environmentally sensitive and tree protection areas. Silt fencing may be substituted where it coincides with this line, but only as approved by the OWNER. (A)

3. Install silt fence along all sides contiguous to wetlands, watercourses and property owned by others affected by the work. Refer to Sedimentation and Erosion Control Plans for locations. (A)

4. After each rain storm monitor the sedimentation and erosion control structures, which may include riprap channels, sediment basins, plunge pools, etc.. Routinely remove sediment during construction to an approved site location when controls exceed one half (1/2) their capacity. (A)

5. Clear vegetation within project limits, except trees designated to remain or in question, as shown on the plans. The decision of how questionable trees are to be treated shall rest with the OWNER and coordinated through the local agency having jurisdiction as construction progresses. All trees and shrubs less than 6" in diameter, and not to remain, shall be chipped and stored on site for mulch. (A)

6. Remove stumps and dispose of at a bulky waste site approved by the ENGINEER and local official having jurisdiction. Disposal of stumps within burial pits on–site shall be prohibited. (B)

7. Bring proposed road intersecting existing travelways to rough subgrade. Install a six inch (6") deep crushed stone anti–tracking pad as detailed and dimensioned on the drawings. At the end of each working day or as required, accumulated soil is to be swept from existing streets. (B)

8. Strip topsoil and subsoil materials as required and stockpile them at locations as shown on the Sedimentation and Erosion Control Plans. Stockpiles may be relocated to meet job conditions but shall not adversely impact any down gradient wetlands. Locations are subject to the ENGINEER'S approval. Provide temporary erosion controls on the downside slopes of all stockpiles. (B)

9. Install drainage, retention basins, sediment traps, riprap swales, and other structural controls as necessary to capture and minimize sediment migration. (C)

10. Conduct all rough cuts and fills for roads, utilities, and landscaped areas, making sure that all fill material is free of brush, rubbish, large boulders, logs, stumps and other objectionable materials. (C)

11. If blasting is required for any cuts, all proposed work is to be coordinated with all local officials having jurisdiction. The contractor is required to secure all permits for blasting operations in accordance with local and state regulations and conduct a pre–blast survey of surrounding properties. Rock spoil is to be disposed of in an appropriate manner as the site plan may show or as locally permitted (C).

12. Provide temporary seeding measures on all exposed soil which were damaged due to construction activities, are outside of construction traffic zones, and are not to be permanently restored or for a period in excess of thirty (30) days. Seeding and seedbed preparation are as specified herein or as indicated on the landscape plan. (C)

13. Excavate and complete remaining drainage. Install silt sack sediment barriers at all catch basins locations. (D)

14. Upon completion of cuts and fills to subgrade, buildings, electric, telephone, cable, gas and water systems can be installed (D).

15. Bring proposed road to pavement subgrade with processed aggregate base and install binder course and curbing. Refer to details (D).

16. Complete final subgrading for all grassed and landscaped areas. Prepare subgrades for placing a minimum of six inches of topsoil. Place topsoil only when permanent seeding and landscaping can follow within a reasonable time frame (E).

17. Exercise final landscaping plan and permanent seeding to provide long–term stabilization (E).

18. Complete final paving with top course and paint surfaces with pavement markings suitable for traffic control (E).

19. Clean and remove all silt from within drainage structures and dispose of materials at an approved site (F).

20. Remove temporary measures once permanent measures have matured as approved by the Municipality's enforcement officer (F).

21. Conduct final inspection with Town to identify deficiencies and establish punch list; complete same to the satisfaction of the Town.

E. SEEDING AND PLANTING REQUIREMENTS:

1. Seedbed Preparation: Fine grade and rake surface to remove stones larger than 2" in diameter. Install needed erosion control devices such as surface water diversions. Grade stabilization structures, sediment basins or drainage channels to maintain grassed areas. Apply limestone at a rate of 90 lbs / 1000 sft unless otherwise required according to soil test results. Apply 10–10–10 fertilizer at a rate of 7.5 lbs / 1000 sft. Work lime and fertilizer into soil uniformly before seeding.

2. Seed Application: Apply grass mixtures at rates specified by hand, cyclone seeder or hydroseeder. Increase seed mixture by 10% if hydroseeder is used. Lightly drag or roll the seeded surface to cover seed. Seeding for selected fine grasses should be done between April 1 and June 1 or between August 15 and October 15. If seeding cannot be done during these times, repeat mulching procedure below until seeding can take place or seed with a quick germinating seed mixture to stabilize slopes. A quick germinating seed mixture (Domestic Rye) can be applied between June 15 and August 15 as approved by the LANDSCAPE ARCHITECT or ENGINEER.

3. Mulching: Immediately following seeding, mulch the seeded surface with straw, hay or wood fiber at a rate of 1.5 to 2 tons / Ac. except as otherwise specified elsewhere. Mulches should be free of weeds and coarse matter. Temporary mulches shall be anchored down on slopes in excess of 3% and within channels of concentrated flows.

4. Grass Seed Mixtures:

Temporary Covers	Permanent Covers
Perennial Rye Grass . 20 lbs / Ac.	Creeping Red Fescue .20 lbs / Ac.
Annual Rye Grass . . 20 lbs / Ac.	Canada Bluegrass . . .20 lbs / Ac.

Substitutions equal to or better than that specified may be permitted based on the local availability of seed mixtures and seasonal conditions when approved by the LANDSCAPE ARCHITECT or ENGINEER.

5. Planting Notes:

    a. All materials shall be inspected, approved and site located by the LANDSCAPE ARCHITECT or ENVIRONMENTAL SUPERVISOR. All plant materials are to be inspected for defects or damage before planting. Substandard materials shall be returned to and replaced by the CONTRACTOR. Acceptable plants are to be planted per the specifications of the landscaping plan. It is the responsibility of the GENERAL CONTRACTOR to provide for the safekeeping and maintenance of plants and vegetation cover for the duration of site construction activity. Once planted, all machinery shall avoid planted areas which should be demarcated clearly by flagged field stakes. Provisions for regular watering and inspections shall be made by the NURSERY CONTRACTOR for the duration of the plant's first year in the ground and all plants which do not survive shall be replaced at the CONTRACTOR'S expense.

    b. All plant material placement is subject to field adjustment in response to other site conditions. These adjustments shall be at the discretion of the ARCHITECT, LANDSCAPE ARCHITECT, SITE SUPERVISOR or ENVIRONMENTALIST.

    c. All plant materials are subject to replacement by suitable alternatives per agreement between OWNER, LANDSCAPE ARCHITECT or ENGINEER, NURSERY CONTRACTOR and appropriate agencies.

F. REGULATORY COMPLIANCE

1. The OWNER of record or its agent shall be responsible for registering the project with the CTDEEP for "Discharge of Stormwater and Dewatering Wastewaters" per Section 22a–430b of the Connecticut General Statutes whenever five acres or more of accumulated disturbance will occur with the parcel's boundaries.

2. The OWNER of record shall be responsible for retaining a licensed Professional Engineer or Certified Soil Erosion & Sediment Control Specialist to inspect the site periodically in accordance with CTDEEP guidelines. Monitoring reports shall be prepared and filed with the OWNER, contractor and Inland–Wetland office of the Town.

3. The Applicant shall be responsible for obtaining all local permits and approvals required from the Planning & Zoning Commission, including Wetlands and Watercourses' Commission, Conservation Commission, and any necessary agencies and departments to satisfy the regulations of the Town.

G. LONG TERM MAINTENANCE SCHEDULE

A Best Management Practices (BMP's) program, for post–development condition on the Project has been developed to manage both the on–site stormwater quality and quantity. The recommendations are proposed to protect the watersheds downstream as well as the associated on–site wetland system.

The success of BMP controls requires professional and regulatory input, and monitoring through the implementations of a long–term maintenance program. A annual report shall be provided to the Town's Inland Wetlands Enforcement Agency no later than November 15th or as set forth by recorded documents on the Land Record. Inspection reports shall be provided by a professional Engineer or a Certified Soil Erosion and Erosion Control specialist. The proposed program schedule recommended for the site includes the following:

A. Catch Basins – all basin sumps to be cleaned out and hooded outlets to be inspected for structurability and integrity. These procedures will be conducted yearly anytime after May 1 and before September 15.

B. Plunge Pool/Stilling Basins – these devices shall be inspected bi–yearly in the spring and fall and will be excavated upon the inspecting engineer's recommendations or when the device is half full of sediment, whichever occurs first. Cleaning of sediment will be done anytime between July 1 and September 15.

C. Detention/Water Quality Basins & Drainage Channel – this system shall be inspected bi–yearly in the spring and fall for the first three years of operation, to insure the functionability of the planted vegetation, the sediment forebay and the microtopography, and removal of invasive plant material. Subsequent inspections shall be performed on a yearly basis observing the above mentioned components as well as the removal of trash, debris and invasive plant species.

D. Energy Dissipators – these devices shall be inspected annually to verify undermining of the system and downstream erosion is not occurring. If such occurs, the device shall be repaired immediately.

NOTE:
1. THE CONTRACTOR SHALL NOTIFY "CALL BEFORE YOU DIG" AT LEAST 72 HOURS PRIOR TO THE START OF EXCAVATION, BY CALLING 1–800–922–4455.

REVISION

NO.	DATE	DESCRIPTION	DRAWN BY	CHECKED BY

COPYRIGHT © 2020 THESE PLANS ARE THE PROPERTY OF DYMAR, PREPARED AS AN INSTRUMENT OF SERVICE FOR PROPOSED USE IN CONNECTION WITH THE PROJECT DESCRIBED HEREIN. THEY ARE NOT TO BE USED ON OTHER PROJECT. DYMAR DOES NOT GUARANTEE THESE PLANS TO REFLECT THE TRUE CONDITIONS. THE CONTRACTOR SHALL VERIFY ALL FIELD CONDITIONS AND DIMENSIONS AND IS RESPONSIBLE FOR NOTIFYING DYMAR IF A DISCREPANCY EXISTS. THERE AFTER DYMAR SHALL HAVE FINAL SAY.

DYMAR
800 Main Street South · Southbury, CT. 06488 · (203) 267–1046 · Fax (203) 267–1547
ENGINEERING · PLANNING · SURVEYING · DEVELOPMENT SERVICES

DRAWINGS TO BE USED FOR LAND USE SUBMISSIONS ONLY
NOT FOR CONSTRUCTION

CLIENT: Estate of Dina M. & James S. Belta
128 Bayberry Lane
Westport, Connecticut 06880

PROJECT: Open Space Residential Subdivision
128 Bayberry Lane
Westport, Connecticut 06880

TITLE: Sediment and Erosion Control Narrative

NOT VALID WITHOUT SIGNATURE AND ORIGINAL SEAL

MARK E. LANCOR, P.E. #12369

DATE:	05/14/2020
SCALE:	N.T.S.
DESIGNED BY:	M.E.L.
DRAWN BY:	C.B.B.
CHECKED BY:	M.E.L.
JOB NO.:	00934
DRAWING NO.:	C-6C

F:\00934 - Bayberry Lane-Westport\Civil\Dwg\006C.dwg, 6C, 5/13/2020 12:22:32 PM, gemas, AutoCAD PDF (Web and Mobile).pc3, ARCH full bleed D (24.00 x 36.00 Inches), 1:1

SOIL EROSION AND SEDIMENT CONTROL CONSTRUCTION STANDARDS:

A. PREAMBLE

The management goals of controlling anticipated impacts to surficial bedrock and soils during and immediately after construction are to reduce the transport and deposition of exposed surficial materials to wetlands and watercourses. A typical erosion control plan has been prepared for the subdivision lots utilizing both temporary and permanent devices to minimize impacts. The plan includes limitations of the duration of soil exposure, criteria and specifications for placement and installation of erosion control devices, a maintenance schedule, and enforcement suggestions to mitigate concerns over its implementation. The primary aim of the erosion and sedimentation control measures will be to reduce soil erosion from areas stripped of vegetation during construction and to prevent siltation of the wetland areas. The erosion and sedimentation control plans are based on the Connecticut Department of Environmental Guidelines and that of the General Permit for Stormwater Protection Discharges.

B. OBJECTIVES AND PRINCIPLES

The objectives of the Soil Erosion and Sediment Control Plan are to manage both runoff and the earthwork operations by utilizing a collective approach to managing their impacts before critical areas are affected. These objectives are as follows:

1. Control erosion at its source with temporary control structures, minimize the runoff from areas of disturbance, and deconcentrate and distribute stormwater runoff through natural vegetation before discharge to critical zones such as streams or wetlands.

2. Keep land disturbances to a minimum – The building sites have been located with consideration given to the natural topography and the soil type. This design approach minimizes the required earthwork, thereby lowering the erosion potential.

3. Time grading and construction to minimize soil exposure – The development will be phased to minimize the extent of cleared soil at any particular time. Within the scheduled phasing, only areas under active construction will be exposed. Residential lots, for example, will remain undisturbed until actual construction of the house is to begin.

4. Retain existing vegetation wherever feasible – Silt fencing will be used to physically define the limit of work. Substantial buffers of existing vegetation will be provided along the existing public ways.

5. Stabilize disturbed areas as soon as possible – in areas where work will not occur for periods longer than two weeks, soil stabilization by hydroseeding or mulching will be done within 48 hours after the land has been cleared.

6. Minimize the length and steepness of slopes – The project has engineered the steepness and length of slopes to minimize runoff velocities and to control concentrated flow. Where concentrated (swale) flow from exposed surfaces is expected to be greater than three feet per second, hay bale or stone check dams will be installed in the swale. The check dams will be placed so that unchecked flow lengths will not be greater than 100 feet.

7. Maintain low runoff velocities – To protect disturbed areas from stormwater runoff, hay bale and/or soil diversion berms will be installed wherever runoff is likely to traverse newly exposed soil. Immediately following the clearing and stripping of topsoil, rough grading for the post-construction swales will take place. The swales will direct runoff so that it can be checked or impounded. Stormwater outlets will be designed to reduce velocities and dissipate energy.

8. Trap sediment on-site and prior to reaching critical areas such as wetlands. Silt fences, hay bale check dams, filter strips, sediment traps, and catch basin filters will be used to either impound sediment-laden runoff or to filter the runoff as it flows through an area. Reference is made to the sedimentation and erosion control drawings, sheet C-6A-F for location of silt fences, hay bales, etc. Silt fencing, augmented by hay bale berms installed on the upgradient side of the silt fencing, will be used wherever land disturbance occurs within 100 feet of wetlands. Stabilized construction entrances will be installed at all construction entrances to prevent construction vehicles from tracking sediment onto off-site roadways. All temporary erosion control devices will be installed prior to the commencement of construction.

9. Establish a thorough maintenance and repair program – Erosion control measures will be inspected weekly during the spring months, monthly during the dry summer months and/or following rainfall storms of greater than 1/2 inch, and repaired as needed to ensure that they function properly.

10. Assign responsibility for the maintenance program – The responsibility for the maintenance program will be assigned to the contractor who shall designate one of its supervisory personnel to be the liaison to the Owner's representative. The Owner will retain the services of a licensed professional who shall inspect and monitor the contractor's methods and have the authority to require modifications to the E&S controls. The Town will be copied on all inspection reports prepared on behalf of the project.

C. TEMPORARY E&S CONTROL DEVICES, DESIGN CRITERIA, AND MAINTENANCE

The devices provided below are typical controls which may or may not be required for the site. However, when site conditions arise which the Engineer, Site Monitor or Town warrant are necessary, the Contractor is to follow the guidelines specified as follows.

1. Silt Fences – Silt fences consist of wire-bound woodroll snow fence covered with a filter fabric. The fence will be four feet high and made of 3/8-inch by 1 1/2-inch wide pickets, approximately two inches apart, bound together by 13-gauge galvanized steel wire. Fences will be secured in place by galvanized steel posts set a maximum of five feet on-center. The filter fabric will be stapled to the upgradient face of each fence. Twine will be used to secure the fence on the uphill side to prevent overturning. The purpose of silt fences is to intercept and detain sediment contained in overland runoff from disturbed areas of limited extent. In addition, the silt fencing will physically delineate the limit of work. (Envirofence by Mirafi, Inc., is an acceptable alternative to the above described system).

   Installation and Maintenance:

   a. Silt fences will be installed where the disturbed land is located 200 feet or less from critical areas (streams and wetlands).

   b. Silt fences will be installed on downslope of work areas as close to the disturbed areas as possible.

   c. At the base of drainageways or where the disturbance will remove natural vegetation within 100 feet of critical areas, the silt fencing will be augmented by a single row of staked haybales.

   d. Filter fabric will be Trevira 1127.

   e. Sediment will be removed from behind siltation fences when sediment has accumulated to 25% of original height of the fence.

2. Hay Bale Diversion Berm – Hay bale diversion berms will be utilized to intercept sediment and reduce runoff velocities around stockpiled earth materials and divert runoff away from disturbed areas of limited extent. This device will be used both upgradient/downgradient of grading operations.

   Installation and Maintenance:

   a. The contributory drainage area will be one acre or less; the area may be larger if inaccessible to construction equipment and to preserve existing trees and vegetation.

   b. The bales will be tightly bound, pin anchored, and imbedded four inches below grade, with ends tightly abutting each other.

   c. The hay bale berms shall be inspected periodically and deteriorated bales replaced until such time as construction is completed and exposed slopes have been stabilized.

3. Hydroseeding – Hydroseeding will be the primary means of stabilizing areas of disturbed earth. Hydroseeding will not be permitted, however, within cut areas or steep slopes. The seed mix, fertilizer, water, and mulch will be applied as a mixture utilizing power equipment. Fertilizer will not be included in the mix for disturbance within the regulated area adjacent to wetlands. The mix will be applied in two equal applications. Dyes will be used to determine the extent of coverage upon application. After grass has appeared, those areas which fail to show a uniform stand of grass will be reseeded. This process will be repeated until all areas are covered with satisfactory growth. Hydroseeding will be completed within 48 hours following completion of rough grading. Seed mixtures appropriate to the soils, slopes and uses will be selected in accordance with the Connecticut Soil and Water Conservation District Guidelines.

4. Erosion Control Blankets – Blankets will be utilized for slopes > 4:1 to stabilize areas of disturbed earth. The type of blanket shall be as manufactured by North American Green or approved equal in accordance with the following schedule:

   a. For slopes from 4:1 to 3:1 and low flow swales use S75 Straw Blankets.

   b. For slopes from 3:1 to 2:1 and moderate flow swales use S150 Straw Blankets.

   c. For slopes from 2:1 to 1:1 and discharge grass channels use SC150 Coconut Fiber and Straw Blankets.

   d. For slopes steeper than 1:1 and engineered channels use use C125 Coconut Fiber Blankets.

   Install all blankets in accordance with all the manufactures recommendations.

5. Dust Control – Water will be applied by sprinkler or water truck as necessary during grading operations to minimize sediment transport and maintain acceptable air quality conditions. Repetitive treatments will be done as needed until grades are paved.

6. Stabilized Construction Entrance – A ramp of crushed stone extending a minimum distance of 100 feet will be installed at each point of ingress and egress to the site. The purpose of the device is to minimize the potential of tracking mud from the site onto public rights-of-way.

   Installation and Maintenance:

   a. Minimum length will be 100 feet

   b. Stone size will be 1.5 to 2.5 inches

   c. Stone will be placed upon the full width of the entrance roads

   d. Thickness of stone will be six inches or greater

   e. Additions of stone will be done periodically to maintain the entrance

   f. All sediment spilled, dropped, washed, or tracked onto public rights-of-way will be removed immediately.

7. Roadway Interceptor Swales – This temporary device consists of a crushed stone-filled swale constructed across proposed roadways. The purpose of this device is to direct runoff away from the road surface and minimize sediment from entering the drainage system. This shortens the length of disturbed slope by intercepting runoff and diverting it away from the roadway catch basins.

   Installation:

   a. Swales will be placed across roads, which are to be constructed in fill:

      i. every 200 feet on slopes of five to ten percent, and

      ii. every 300 feet on slopes less than five percent.

   b. Contributory drainage area less than five acres.

   c. Swales drain to sediment traps or sedimentation basins.

8. Hay Bale Check Dams – Hay bale check dams consist of tightly bound, steel pin anchored hay bales embedded four inches below grade in drainage swales adjacent to roadways or against diversion berms at the toe of an exposed slope. The purpose of a hay bale check dam is to reduce runoff velocity and promote deposition and filtering of sediment from runoff.

   Installation and Maintenance:

   a. Check dams will be placed in drainage swales or against diversion berms at the toe of an exposed slope:

      i. every 100 feet on slopes greater than ten percent,

      ii. every 200 feet on slopes of five to ten percent, and

      iii. every 300 feet on slopes less than five percent.

   b. Sediment shall be removed from hay bale check dams when sediment has accumulated to 50 percent of the original height.

9. Sediment Traps – At appropriate intervals, runoff collected in roadway interceptor swales or other swales will be directed, via a small dike or ditch, to a sediment trap. The trap consists of a small excavation and/or embankment. The purpose of the trap is to collect runoff, promote settling of sediment and deconcentrate and distribute clean runoff overland through vegetation before entering watercourses and wetlands.

   Installation and Maintenance:

   a. Contributory drainage areas less than or equal to five acres.

   b. Utilized as part of swales prior to discharge to natural slopes.

   c. Traps will be placed such that runoff discharging from the trap will flow at least 30 feet overland through natural vegetation before entering stream channels or wetlands.

   d. Traps will be designed for a minimum of 1.9 cubic feet of storage/acre of drainage area received by the trap.

   e. Maximum depth of trap will be five feet.

   f. Trap embankments shall not exceed five feet in height. Top width shall be four feet and sides shall have a 2:1 or flatter slope.

   g. Trap sides shall be compacted during construction.

   h. The trap outlet shall have crushed stone rip-rap hand placed over the trap.

   i. Traps will be cleaned when sediment has accumulated to 50 percent of design volume and removed sediment deposited so it will not erode.

10. Diversion/Interceptor – Both grassed swales and rock-lined swales will be utilized (depending on grade) to convey runoff during construction. Swales generally will be located adjacent to roads. At frequent intervals, runoff in the roadway swales will pass through hay bale check dams and sediment traps to reduce velocities and remove sediment. As often as possible, runoff in the swales will be directed overland and allowed to filter through natural vegetation.

    Installation:

    a. Grassed swales on slopes less than five percent.

    b. Rock-lined swales on slopes greater than five percent.

    c. Swales will be temporary.

11. Catch Basin Filters – Temporary catch basin filters will be utilized to prevent the deposition of sediment into the storm sewer system prior to the stabilization of exposed areas with vegetation and/or pavement. These filters will consist of tightly bound, pin-anchored hay bales embedded four inches below grade, surrounding each catch basin inlet.

    Installation and Maintenance:

    a. Placed around each catch basin inlet prior to paving or stabilization with vegetation.

    b. Sediment shall be removed from the filters when it has accumulated to 50 percent of the filter's original height.

12. Diversion Berm (Soil) – This is a temporary raised berm of compacted soil, placed across a disturbed slope, that intercepts runoff from disturbed areas and directs it to an appropriate outlet. This device will be used mostly on steep slopes above deep excavations.

    Installation:

    a. Diversion berms may be placed on cut and fill slopes exceeding ten feet in height.

    b. Contributory drainage area should not be greater than one acre.

    c. Runoff will be diverted overland by the berms to sediment traps, sedimentation basins, swales, or check dams.

    d. On slopes over five percent, additional stabilization is required in the form of stone rip-rap eight inches vertically along the upslope side of the berm and seven feet upslope from the upslope toe of the berm.

    e. Top width of berm will be two feet. Side slopes will be 2:1 or flatter.

    f. All berms shall be machine compacted.

13. Rock Check Dams – Temporary rock check dams are small dikes (approximately three feet high) constructed at frequent intervals in drainage ways where silt fences and hay bale check dams are impractical due to high flow velocities. The primary function of these devices is to promote deposition of sediment and provide some filtering of runoff water. Check dams will be constructed with a 1.5 to 2.0 inch crushed stone core and a layer of peastone on the upstream face.

    Installation:

    a. Check dams will be placed in drainage ways:

    b. downstream of stream crossing where high flow velocities make other sediment filtering devices impractical.

    c. Sediment shall be removed from rock check dams when sediment has accumulated to 50 percent of original height.

    d. Peat or other wetlands material will be excavated and stockpiled prior to rock check dam installation and replaced once construction is complete.

14. Sediment Basins – This is a temporary embakment/impoundment area, excavated pit or used as part of a permanent detention device with a controlled outlet(s), that is a combination of wet and dry storage areas are created. The purpose is to intercept and retain sediment during construction, reduce or abate undesirable deposition of sediment to the waters of the state and downstream properties.

    Installation and Maintenance:

    a. Contributory drainage area less than 100 acres.

    b. Effective height of the basin is 15 feet or less.

    c. The product of the storage times the effective height should be less than 3,000.

    d. A minimum residence storage time of 10 hours for a 10 year frequency, 24 hour, Type III storm.

    e. Flood Routing by TR-55.

    f. Sediment storage volume shall be calculated by the Universal Soil Loss equation with an 80% trap efficiency for a predicted one year load.

    g. Minimum capacity volumes shall be 134 cubic yards of water storage per acre drained of disturbed area contributing to the basin.

    h. Sediment basins shall be cleaned when sediment accumulates to 50% of the net storage capacity. Dewater basin through pumping means prior to removing sediment. Material shall be removed and left to dry to an approved location.

15. Energy Dissipaters – Outlet Protection Level Spreaders – This is a permanent device used to reduce depth and velocity of concentrated runoff and release it uniformly into a stable area. Except as otherwise noted, they shall be constructed of rip-rap stone.

    Installation and Maintenance:

    a. Design flows for 10 year storms or less than 20 cfs.

    b. Length, width, and detail is as shown on the site plans and detail sheets.

    c. To be constructed on undisturbed earth.

    d. Inspect annually and repair immediately where erosion occurs.

16. Hydrograss And Floc Log Specifications:

    a. Pre-Construction:

       Send a soil sample directly to Applied Polymer Systems, Inc., 519 Industrial Drive, Woodstock, GA 30189, Attn: Steve Iwinski (678-494-5998) to determine the log, liquid, and crystal types most appropriate for the site soil type.

    b. Construction Phase Applications:

       (1) Swales and Sedimentation Basins

       i. Two Floc Logs shall be placed at each check dam throughout the swale system.

       ii. Logs should be applied via 3 FT wood stakes and placed in running water areas of the swale.

       iii. 25 LBS/150 LF of Clarifying Crystal shall be applied to swales in a one time only application to jump start the logs.

       (2) Disturbed Soil Areas

       i. Apply wood fiber slurry to all disturbed areas. Slurry shall consist of 1,500 LBS of real wood fiber per acre, 2.5 gallons of Silt Stop Liquid Emulsion per acre, and 100 LBS of Guar Gum per acre.

       ii. An alternative to wood fiber slurry is to apply hay or straw mulch and cover with 25 LBS/AC of Silt Stop Clarifying Crystals with a mulch spreader.

    c. Check Dam Construction:

       (1) Dams should consist of 1-3 inch stone formed in a U or V shape towards the sedimentation basin.

       (2) Three layers of Coconut Jute Matting should be applied to the inside of the check dam and secured with staples.

    d. Maintenance:

       (1) Floc Logs shall be inspected after each major storm event.

       (2) Sediment buildup around Floc Logs shall be removed and the log reset when 50% of the log is no longer exposed.

       (3) Logs shall be replaced when the log is no longer performing as intended as specified by the manufacture's technical representative.

D. CONTROL PLAN IMPLEMENTATION

In addition to the devices and schedules outlined in this soil erosion and sediment control plan, the following procedures will be followed by the earthwork contractor:

1. The contractor shall inspect the effectiveness and condition of erosion control devices during storm events, after each rainfall of one-half inch magnitude or greater, prior to weekends, and prior to forecasted storm events.

2. The contractor shall repair or replace damaged erosion control devices immediately, and in no case, more than four hours after observing such deficiencies.

3. The contractor shall be prepared to implement interim drainage controls and erosion control measures as may be necessary during the course of construction.

4. The contractor shall make available on-site all equipment, materials and labor necessary to effect emergency erosion control and drainage improvement within four hours of any impending emergency situation.

5. The contractor shall make a final inspection, clean all cross culverts and sweep off roadways before the road is dedicated to the Town.

6. The contractor shall have on call at all times a responsible representative who, when authorized, will mobilize the necessary personnel, materials and equipment and otherwise provide the required action when notified of any impending emergency situation.

7. The contractor shall supply a telephone number to the MUNICIPAL Engineer and IW enforcement officer so that the contractor may be contacted during the evenings and on weekends, if necessary.

E. PERMANENT CONTROL DEVICES

Following construction, erosion will be prevented by established vegetation cover and by permanent devices which include catch basins with sediment traps, grassed swales, natural filter traps, and outlet protection.

Through the strict implementation of this proposed soil erosion and sediment control plan, erosion of soils on the site will be minimized and contained to prevent sedimentation of site wetlands and adjacent and downstream properties and watercourses.

NOTE:
1. CAN BE USED ON ANY SITE UNDERGOING ACTIVE CONSTRUCTION, ESPECIALLY EXCAVATION, BUT GENERALLY ARE NOT SUITABLE FOR LARGE VOLUMES OF RUNOFF. WATER PUMPED FROM EXCAVATIONS OR DIVERTED FROM STOCKPILE OR TRACKING AREAS MAY BE DIRECTED TO DEWATERING PITS FOR PRIMARY SEDIMENT REMOVAL. THIS PRACTICE IS PARTICULARLY APPLICABLE TO SMALL SITES OR URBAN AREAS WHERE THERE IS INSUFFICIENT ROOM FOR MULTIPLE SILT TRAPS OR SEDIMENT BASINS.

INSTALLATION NOTES:
1. PIT DIMENSIONS ARE VARIABLE.
2. THE STANDPIPE SHOULD BE A PERFORATED 12" TO 18" DIAMETER CORRUGATED METAL, PVC OR HDPE PIPE.
3. A BASE OF 2" WASHED STONE SHOULD BE PLACED IN THE PIT TO A DEPTH OF 12" BELOW THE STANDPIPE. THE PIT SURROUNDING THE STANDPIPE SHOULD THEN BE BACKFILLED WITH 2" WASHED STONE. THE STANDPIPE SHOULD EXTEND 12"-18" ABOVE THE LIP OF THE PIT.
4. IF DISCHARGE WILL BE PUMPED DIRECTLY TO A STORM DRAINAGE SYSTEM, THE STANDPIPE SHOULD BE WRAPPED WITH FILTER FABRIC BEFORE INSTALLATION.
5. IF DESIRED, 1/4"-1/2" HARDWARE CLOTH MAY BE PLACED AROUND THE STANDPIPE, PRIOR TO ATTACHING THE FILTER FABRIC. THIS WILL INCREASE THE RATE OF WATER SEEPAGE INTO THE PIPE.

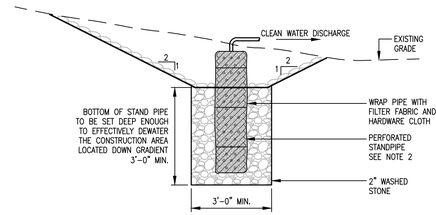

ELEVATION

SEC 149A

TEMPORARY DEWATERING PIT DETAIL

N.T.S.

NOTES:
1. "DIRT BAG" IS A GEOTEXTILE FILTER SYSTEM, MANUFACTURED BY ACF 1-800-644-9223.
2. INSTALL THREE (3) INCHES OF 1 1/4" - 1 1/2" WASHED STONE OR TWO (2) INCH STRAW MAT BELOW "DIRT BAG" TO ALLOW DISCHARGE TO FLOW DOWN GRADIENT AND MINIMIZE EROSION.
3. PUMP SIZE SHOULD BE DETERMINED BY ENGINEER PRIOR TO CONSTRUCTION BASED ON CURRENT STREAM FLOW CONDITIONS.
4. ADDITIONAL "DIRT BAGS" MAY BE REQUIRED BY THE ENGINEER AT THE TIME OF CONSTRUCTION, DEPENDING ON PUMPING FLOW CONDITIONS.
5. WHEN MORE THAN ONE (1) "DIRTBAG" IS SPECIFIED, INSTALL BAGS IN PARALLEL, UTILIZING 4" PVC TEES AND ELBOWS.
6. REPLACE ANY "DIRT BAG" WHEN IT CAN NO LONGER EFFICIENTLY FILTER SEDIMENT OR DISCHARGE WATER AT REASONABLE RATE.
7. DISPOSE OF "DIRT BAG" IN AN ENVIRONMENTALLY ACCEPTABLE MANNER.

"DIRT BAG" DIMENSION SCHEDULE

BAG TYPE	BAG LENGTH	BAG WIDTH	UNIT(S) SPECIFIED
A	15'-0"	10'-0"	0
B	15'-0"	12'-6"	0
C	15'-0"	15'-0"	2
D	30'-0"	15'-0"	0

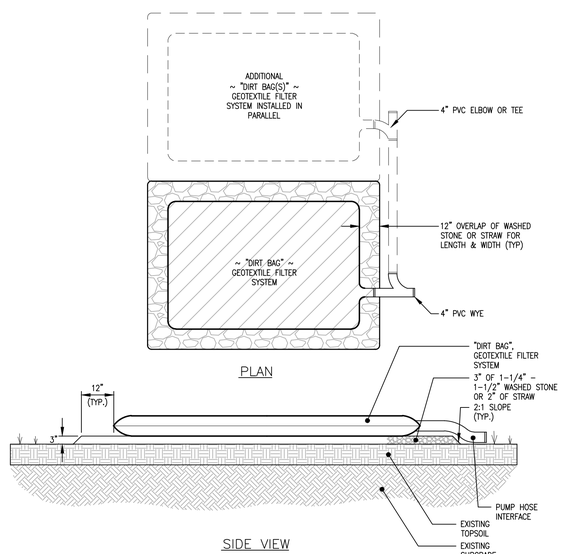

SEC 262

"DIRT BAG" DETAIL

N.T.S.

NOTE:
1. THE CONTRACTOR SHALL NOTIFY "CALL BEFORE YOU DIG" AT LEAST 72 HOURS PRIOR TO THE START OF EXCAVATION, BY CALLING 1-800-922-4455.

REVISION

NO.	DATE	DESCRIPTION	DRAWN BY	CHECKED BY

COPYRIGHT © 2020 THESE PLANS ARE THE PROPERTY OF DYMAR, PREPARED AS AN INSTRUMENT OF SERVICE. THEY MAY NOT BE USED FOR ANY PURPOSE NOT SPECIFICALLY AGREED TO IN WRITING BY DYMAR. THE SITE PROJECT: DYMAR DOES NOT GUARANTEE THESE PLANS TO REFLECT THE TRUE CONDITIONS. THE CONTRACTOR SHALL VERIFY ALL FIELD CONDITIONS AND DIMENSIONS AND IS RESPONSIBLE FOR NOTIFYING DYMAR IF A DISCREPANCY EXISTS. THESE PLANS AND DYMAR SHALL HAVE FINAL SAY.

DYMAR
800 Main Street South · Southbury, CT. 06488 · (203) 267-1146 · Fax (203) 267-1547
ENGINEERING · PLANNING · SURVEYING · DEVELOPMENT SERVICES

DRAWINGS TO BE USED FOR LAND USE SUBMISSIONS ONLY
NOT FOR CONSTRUCTION

CLIENT: Estate of Dina M. & James S. Belta
128 Bayberry Lane
Westport, Connecticut 06880

PROJECT: Open Space Residential Subdivision
128 Bayberry Lane
Westport, Connecticut 06880

TITLE: Sediment and Erosion Control Construction Standards & Misc. Details

NOT VALID WITHOUT SIGNATURE AND ORIGINAL SEAL

MARK E. LANCOR, P.E. #12369

DATE:	05/14/2020
SCALE:	N.T.S.
DESIGNED BY:	M.E.L.
DRAWN BY:	C.B.B.
CHECKED BY:	M.E.L.
JOB NO:	00934
DRAWING NO:	C-6D

F:\00934 - Bayberry Lane-Westport\Civil\Dwgs\006D.dwg, 6D, 5/13/2020 12:22:33 PM, gemas, AutoCAD PDF (Web and Mobile).pc3, ARCH full bleed D (24.00 x 36.00 Inches), 1:1

NOTES:
1. ALL TEMPORARY SWALES SHALL HAVE UNINTERRUPTED POSITIVE GRADE TO AN OUTLET.
2. DIVERTED RUNOFF FROM A DISTURBED AREA SHALL BE CONVEYED TO A SEDIMENT TRAPPING DEVICE.
3. DIVERTED RUNOFF FROM AN UNDISTURBED AREA SHALL OUTLET DIRECTLY INTO AN UNDISTURBED STABILIZED AREA AT NON-EROSIVE VELOCITY.
4. ALL TREES, BRUSH, STUMPS OBSTRUCTIONS, AND OTHER OBJECTIONABLE MATERIAL SHALL BE REMOVED AND DISPOSED OF SO AS NOT TO INTERFERE WITH THE PROPER FUNCTIONING OF THE SWALE.
5. THE SWALE SHALL BE EXCAVATED OR SHAPED TO LINE, GRADE AND CROSS SECTION AS REQUIRED TO MEET THE CRITERIA SPECIFIED HEREIN AND BE FREE OF BANK PROJECTIONS OR OTHER IRREGULARITIES WHICH WILL IMPEDE NORMAL FLOW.
6. FILLS SHALL BE COMPACTED BY EARTH MOVING EQUIPMENT.
7. ALL EARTH REMOVED AND NOT NEEDED FOR CONSTRUCTION SHALL BE PLACED SO THAT IT WILL NOT INTERFERE WITH THE FUNCTIONING OF THE SWALE.
8. PERIODIC INSPECTION AND REQUIRED MAINTENANCE MUST BE PROVIDED AFTER EACH RAIN EVENT.
9. CHANNEL STABILIZATION SHALL BE INSPECTED AND REPLACED IN KIND AS NEEDED.
10. INSTALL ROCK CHECK DAMS AT 100' INTERVALS WHERE CHANNEL SLOPE EXCEEDS 5%.
11. STABILIZATION SHALL BE AS PER THE CHART BELOW.

CHANNEL STABILIZATION TABLE

TYPE OF TREATMENT	CHANNEL GRADE	TYPE-I A=1'-0"MIN B=4'-0"MIN (5 AC OR LESS)	TYPE-II A=1'-6"MIN B=8'-0"MIN (5 AC – 10AC)
1	0.5%-3%	SEED AND STRAW MULCH	SEED AND STRAW MULCH
2	3.1%-5%	SEED AND STRAW MULCH	SEED W/ JUTE NETTING OR EQUAL
3	5.1%-8%	SEED WITH JUTE NETTING OR APPRV'D EQUAL	LINED RIP-RAP 4-8" OR RECYCLED CONCRETE EQUIVALENT
4	8.1%-20%	LINED 4-8" RIP-RAP	ENGINEERED DESIGN

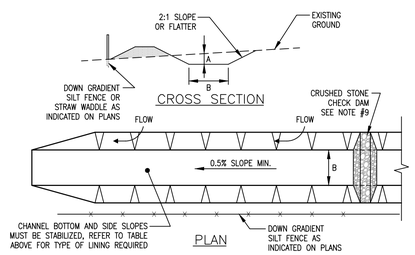

SEC 211 TEMPORARY DRAINAGE OR DIVERSION CHANNEL
N.T.S.

NOTES:
1. AREA CHOSEN FOR STOCKPILING OPERATIONS SHALL BE DRY AND STABLE.
2. MAXIMUM SLOPE OF STOCKPILE SHALL BE 2:1.
3. UPON COMPLETION OF SOIL STOCKPILING, EACH PILE SHALL BE SURROUNDED WITH EITHER SILT FENCING OR STRAWBALES, THEN STABILIZED WITH VEGETATION OR COVERED WITH POLYETHYLENE SHEETING.
4. TO BE USED WHERE TOPSOIL IS NECESSARY FOR REGRADING AND VEGETATING DISTURBED AREAS. TOPSOIL IS APPLIED TO SUBSOILS THAT ARE DRAUGHTY (HAVING LOW AVAILABLE MOISTURE FOR PLANTS), STONEY, SALTY, HAVE LOW PERMEABILITY, OR ARE EXTREMELY ACID. IT IS ALSO USED TO BACKFILL AROUND SHRUB AND TREE TRANSPLANTS. PRESERVATION OF EXISTING TOPSOIL IS BENEFICIAL FOR ALL TYPES OF LAWN OR ORNAMENTAL PLANTINGS.
5. TEMPORARY STOCKPILE STABILIZATION MEASURES INCLUDE VEGETATIVE COVER, MULCH, NONVEGETATIVE COVER, AND PERIPHERAL SEDIMENT TRAPPING BARRIERS. THE STABILIZATION MEASURE(S) SELECTED SHOULD BE APPROPRIATE FOR THE TIME OF YEAR, SITE CONDITIONS, AND REQUIRED PERIOD OF USE.
6. SEE EROSION AND SEDIMENT CONTROL PLAN FOR LOCATIONS.

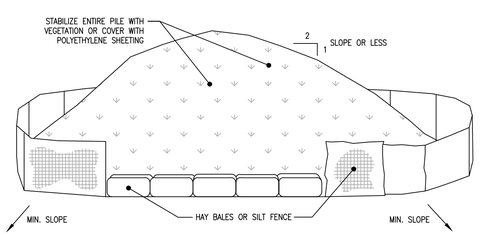

SEC 196 SOIL STOCKPILE DETAIL
N.T.S.

NOTES:
1. MAX. AREA DRAINAGE TO A BARRIER IS ONE ACRE OR LESS WITH SLOPE GRADIENT BEHIND A BARRIER LIMITED TO 2H:1V.
2. MAX. DISTANCE ON SLOPES BETWEEN BARRIERS IS 100' WITH ALLOWABLE FLOWS RECEIVED AT CHECK DAMS UP TO ONE C.F.S.
3. STRAW BALES SHALL BE INSPECTED PERIODICALLY AND SHALL BE REMOVED AND REPLACED AFTER 3 MONTHS EXCEPT AS OTHERWISE DIRECTED BY THE ENGINEER OR ENFORCEMENT OFFICIAL. BALES SHALL NOT BE REMOVED UNTIL UPSLOPE AREAS HAVE BEEN PERMANENTLY STABILIZED.

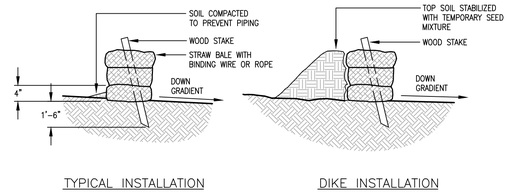

SEC 028 TYPICAL STRAW BALE INSTALLATION DETAIL
N.T.S.

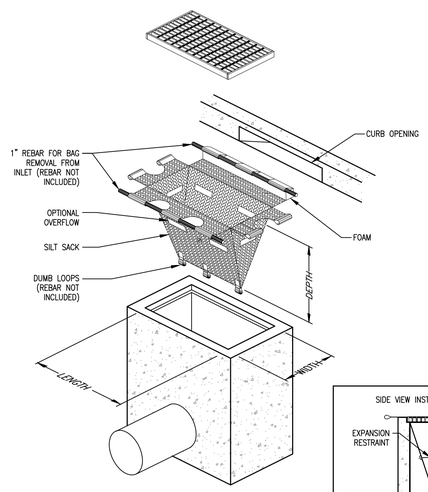

NOTE:
FOR LENGTH AND WIDTH DIMENSIONS REFER TO CATCH BASIN DETAIL. SILT SACK SHALL BE INSTALLED SUCH THAT THE DEPTH SHALL NOT BE BELOW THE CROWN OF THE OUTLET PIPE.

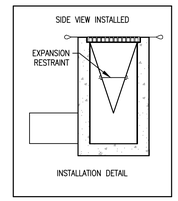

SEC 305 INLET SEDIMENT CONTROL DEVICE WITH CURB DEFLECTOR DETAIL
N.T.S.

NOTES:
1. SPACING MAY VARY AS PER MANUFACTURERS RECOMMENDATIONS. MAXIMUM SPACING IS 8'-0".
2. JOIN SILT FENCE SECTIONS BY OVERLAPPING END STAKES TO PREVENT SILT FROM BYPASSING ADJOINING UNITS.
3. INSPECT PERIODICALLY AND REMOVE SILT WHEN MORE THAN 1/2 THE HEIGHT IS FILLED.
4. APPLY CRYSTAL POLYMER DOWN GRADIENT OF FENCE PER MANUFACTURER'S RECOMMENDATIONS WHEN CONSTRUCTION ZONE IS WITHIN 100 FEET OF A WETLAND OR WATERCOURSE.

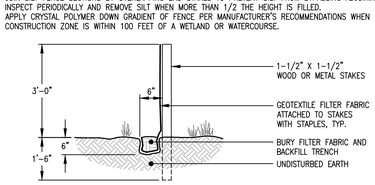

SEC 008 FILTER FABRIC FENCE DETAIL
N.T.S.

NOTES:
1. THE RISER PIPE DIAMETER TO BE THE SAME AS THE OUTLET PIPE DIAMETER.
2. USE MODIFIED RIP-RAP UNLESS AS SPECIFIED ELSEWHERE ON PLANS.
3. USE MARIFI 100X WOVEN FILTER FABRIC LINER AS MANUFACTURED BY MARIFI INC. (800-438-1855), OR APPROVED EQUAL. SILT TO BE REMOVED PERIODICALLY FROM LINER TO PREVENT CLOGGING AS DIRECTED BY ENGINEER.
4. WHEN OUTLET FILTER IS INSTALLED ADJACENT TO AN OUTLET CONTROL STRUCTURE, PIPE SHALL BE BUTTED UP AGAINST THE CONTROL STRUCTURE INLET ORIFICE.

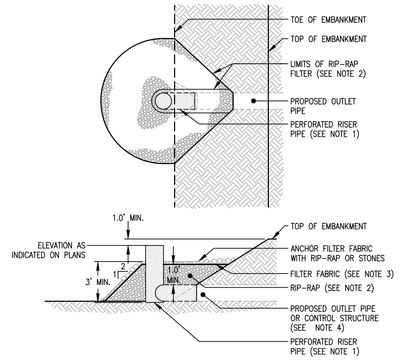

SEC 273 TEMPORARY SEDIMENT TRAP OUTLET FILTER DETAIL
N.T.S.

NOTES:
1. SLOPE SURFACE SHALL BE FREE OF ROCKS, CLODS, STICKS AND GRASS. MATS/BLANKETS SHALL HAVE GOOD SOIL CONTACT.
2. LAY BLANKETS LOOSELY AND STAKE OR STAPLE TO MAINTAIN DIRECT CONTACT WITH THE SOIL. DO NOT STRETCH.

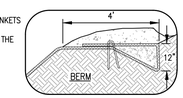

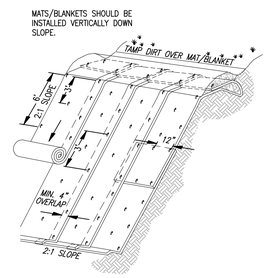

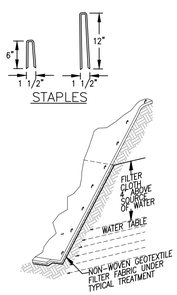

SEC 102 EROSION BLANKET & REINFORCEMENT MAT SLOPE INSTALLATION
N.T.S.

NOTES:
1. LENGTH EQUAL TO 50' MINIMUM WHERE SOILS ARE SAND AND GRAVEL: PROVIDE 100' WHERE SOILS ARE PREDOMINANTLY CLAYS OR SILTS.
2. SPECIFICATIONS: CRUSHED STONE – ASTM C-33, GRADE NO. 2; GEOTEXTILE FILTER FABRIC – MIRAFI 500X OR APPROVED EQUAL.

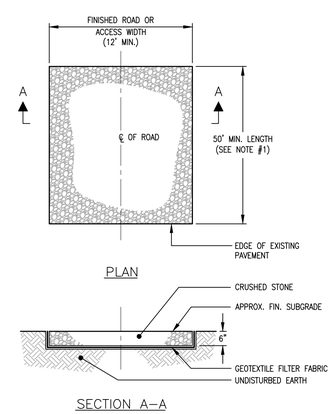

SEC 001 ANTI-TRACKING PAVEMENT DETAIL
N.T.S.

NOTES:
1. INSTALL CRUSHED STONE CHECK DAMS ON SWALES WITH SLOPES GREATER THAN 5% AT 100' INTERVALS.
2. SWALE SLOPES AS NOTED ON PLANS ARE MINIMUM SLOPES.
3. SWALE DEPTH AS NOTED ON PLANS (1'-6" MIN.)

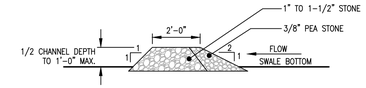

SEC 197 TYPICAL CRUSHED STONE CHECK DAM
N.T.S.

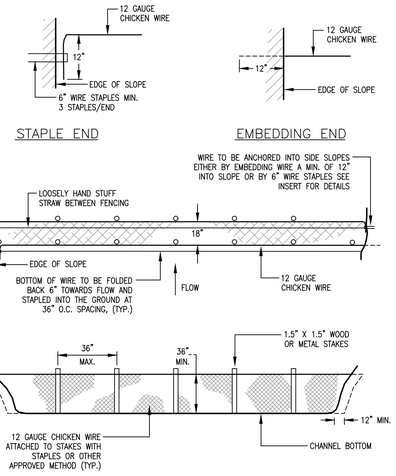

SEC 112 WIRE & STRAW SEDIMENTATION BARRIER
N.T.S.

NOTES:
1. INSTALL WATER BREAKS / ROLLING DIPS (DIVERSIONS) AS SOON AS THE RIGHT-OF-WAY HAS BEEN CLEARED AND GRADED.
2. ROLLING DIPS ARE TO BE INSTALLED IF THE ROAD IS INTENDED FOR WINTER USE OR USE BY VEHICLES WITH LOW CLEARANCE. THE HEIGHT FROM CHANNEL BOTTOM TO THE TOP OF THE SETTLED RIDGE SHALL BE 12"-18" AND THE SIDE SLOPES OF THE RIDGE SHALL BE 2:1 OR FLATTER.
3. THE OVERFLOW END OF THE DIVERSIONS SHALL HAVE A NATURAL OR CONSTRUCTED STABLE OUTLET TO CLEAN THE SEDIMENT OUT OF THE WATER AND PREVENT EROSION. NEVER END OUTLET DIVERSIONS ONTO UNPROTECTED FILL SLOPES.
4. SPACING BETWEEN DIVERSIONS MAY NEED TO BE ADJUSTED TO FIELD CONDITIONS SO AS TO USE THE MOST SUITABLE AREAS FOR WATER DISPOSAL. THESE CHANGES SHALL BE APPROVED PRIOR TO THEIR INSTALLATION BY THE DESIGN ENGINEER.
5. USE GRAVEL TO STABILIZE THE DIVERSIONS WHERE SIGNIFICANT VEHICULAR TRAFFIC IS ANTICIPATED.
6. DIVERSIONS SHALL BE INSPECTED PERIODICALLY AND AFTER EVERY HEAVY RAIN STORM FOR EROSION DAMAGE. REMOVE SEDIMENT IMMEDIATELY FROM THE FLOW AREA AND MAKE TIMELY REPAIRS AS NEEDED.
7. DRAIN TRENCH TO BE INSTALLED FOR PERMANENT GRAVEL SURFACES.

ROAD GRADE	SPACING BETWEEN WATER BREAKS (AVERAGE SOIL)	SPACING BETWEEN WATER BREAKS (HIGH ERODIBLE)
0–1 %	400'	200'
1–2 %	245'	125'
2–5 %	125'	100'
5–10 %	100'	75'
10–20%	75'	50'
20–35%	50'	25'
>35%	25'	25'

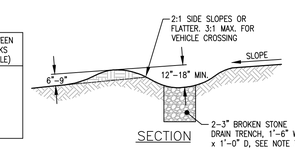

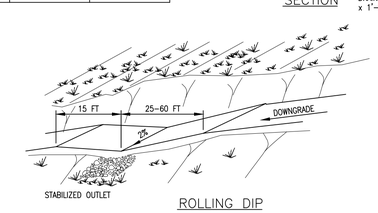

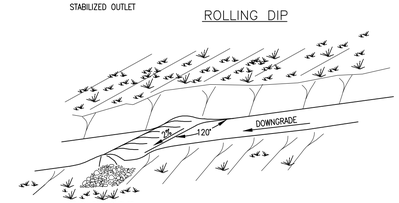

SEC 039B WATER BREAK/ROLLING DIP DETAIL
N.T.S.

NOTE:
1. THE CONTRACTOR SHALL NOTIFY "CALL BEFORE YOU DIG" AT LEAST 72 HOURS PRIOR TO THE START OF EXCAVATION, BY CALLING 1-800-922-4455.

NO.	DATE	REVISION DESCRIPTION	DRAWN BY	CHECKED BY

COPYRIGHT © 2020. THESE PLANS ARE THE PROPERTY OF DYMAR, PREPARED AS AN INSTRUMENT OF SERVICE. THIS PROPOSAL WAS BASED ON INFORMATION PROVIDED BY OTHERS AT THE TIME OF ESTABLISHING THE SCOPE OF THE PROJECT. DYMAR DOES NOT GUARANTEE THESE PLANS TO REFLECT THE TRUE CONDITIONS. THE CONTRACTOR SHALL VERIFY ALL FIELD CONDITIONS AND DIMENSIONS AND IS RESPONSIBLE FOR NOTIFYING DYMAR IF A DISCREPANCY EXISTS. THERE AFTER DYMAR SHALL WAIVE TRUE, SAY.

DYMAR
800 Main Street South · Southbury, CT. 06488 · (203) 267-1046 · Fax (203) 267-1547
ENGINEERING · PLANNING · SURVEYING · DEVELOPMENT SERVICES

DRAWINGS TO BE USED FOR LAND USE SUBMISSIONS ONLY
NOT FOR CONSTRUCTION

CLIENT: Estate of Dina M. & James S. Belta
128 Bayberry Lane
Westport, Connecticut 06880

PROJECT: Open Space Residential Subdivision
128 Bayberry Lane
Westport, Connecticut 06880

TITLE: Sediment and Erosion Control Details

NOT VALID WITHOUT SIGNATURE AND ORIGINAL SEAL
MARK E. LANCOR, P.E. #12369

DATE: 05/14/2020
SCALE: AS NOTED
DESIGNED BY: M.E.L.
DRAWN BY: C.B.B.
CHECKED BY: M.E.L.
JOB NO.: 00934
DRAWING NO.: C-6E
1 2

F:\00934 - Bayberry Lane-Westport\Civil\Dwg\006E.dwg, 8E, 5/13/2020 12:22:35 PM, genus, AutoCAD PDF (Web and Mobile).pc3, ARCH full bleed D (24.00 x 36.00 Inches), 1:1

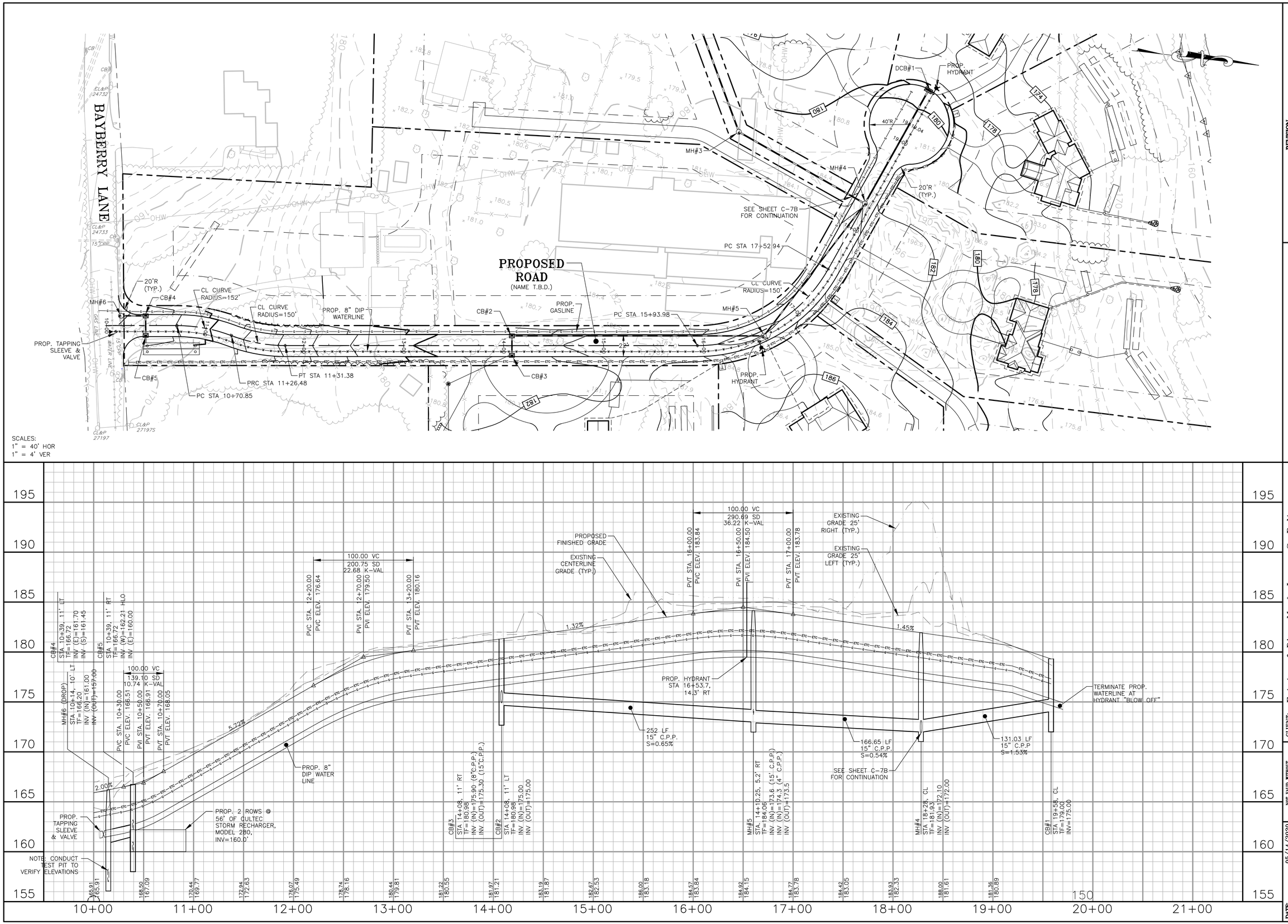

NO.	DATE	REVISION DESCRIPTION	DRAWN BY	CHECKED BY

COPYRIGHT © 2020. THESE PLANS ARE THE PROPERTY OF DYMAR, PREPARED AS AN INSTRUMENT OF SERVICE. THE PROPOSALS HEREIN DEPICTED ARE TO BE CONSTRUCTED ON THE PROPERTY OF THE CLIENT FOR USE ON THE PROJECT. DYMAR DOES NOT GUARANTEE THESE PLANS TO REFLECT THE TRUE CONDITIONS. THE CONTRACTOR SHALL VERIFY ALL FIELD CONDITIONS AND DIMENSIONS AND IS RESPONSIBLE FOR NOTIFYING DYMAR IF A DISCREPANCY EXISTS. THERE AFTER, DYMAR SHALL HAVE FINAL SAY.

DYMAR
800 Main Street South · Southbury, Ct. 06488 · (203) 267-1046 · Fax (203) 267-1547
ENGINEERING · PLANNING · SURVEYING · DEVELOPMENT SERVICES

DRAWINGS TO BE USED FOR LAND USE SUBMISSIONS ONLY
NOT FOR CONSTRUCTION

CLIENT: Estate of Dina M. & James S. Belta
128 Bayberry Lane
Westport, Connecticut 06880

PROJECT: Open Space Residential Subdivision
128 Bayberry Lane
Westport, Connecticut 06880

TITLE: Plan and Profile Drawing

NOT VALID WITHOUT SIGNATURE AND ORIGINAL SEAL

MARK E. LANCOR, P.E. #12369

DATE:	05/14/2020
SCALE:	AS NOTED
DESIGNED BY:	M.E.L.
DRAWN BY:	C.B.B.
CHECKED BY:	M.E.L.
JOB NO:	00934
DRAWING NO:	C-7A

F:\00934 - Bayberry Lane-Westport\Civil\Dwg\007.dwg, 7A, 5/13/2020 12:22:37 PM, gemos, AutoCAD PDF (Web and Mobile).pc3, ARCH full bleed D (24.00 x 36.00 Inches), 1:1

NOTE:
1. PROVIDE NATURAL FIELD STONE OUTLET PROTECTION (3'W x 5'L) TYPICAL AT FE #2, #3).
2. REFER TO SHEET C-8B FOR DETAILS FOR CONCRETE WEIR, BIOSWALE AND UNDERDRAIN.

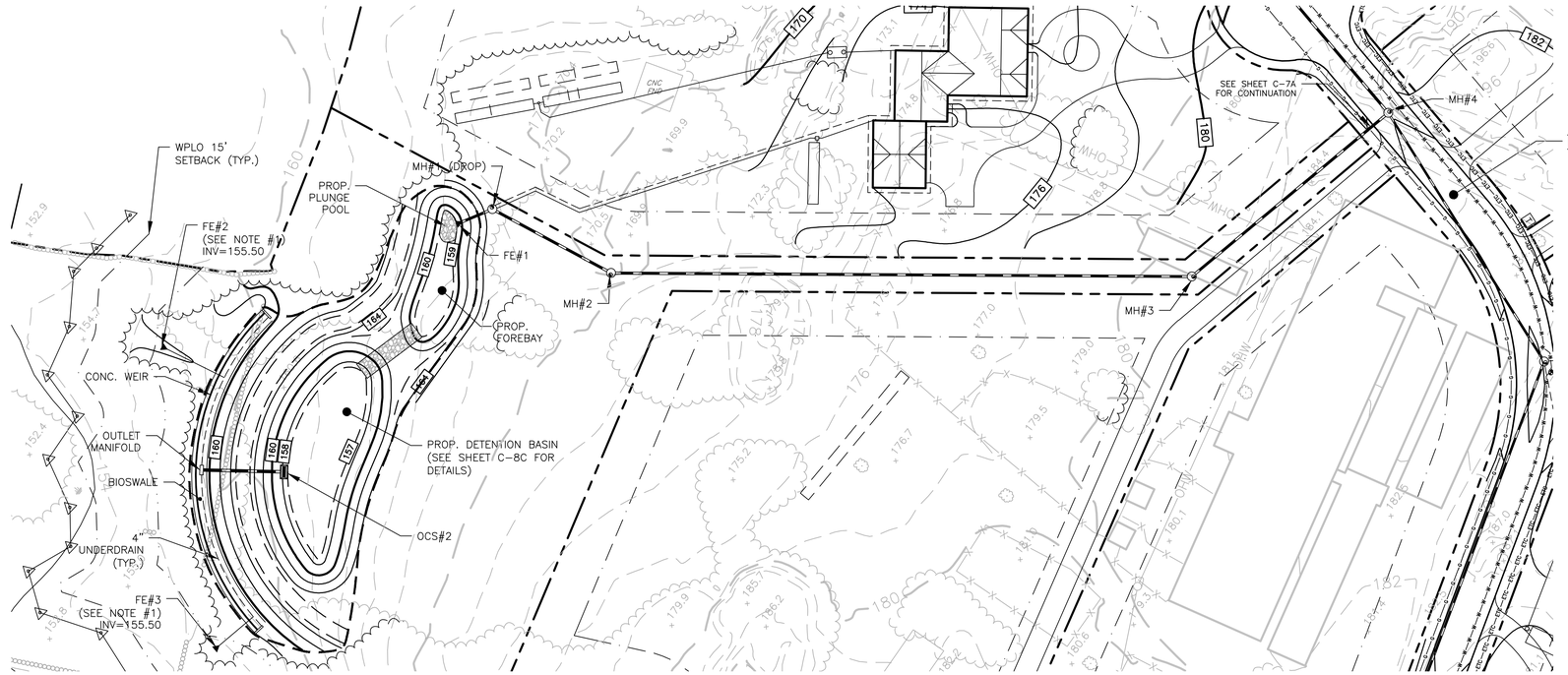

SCALES:
1" = 40' HOR
1" = 4' VER

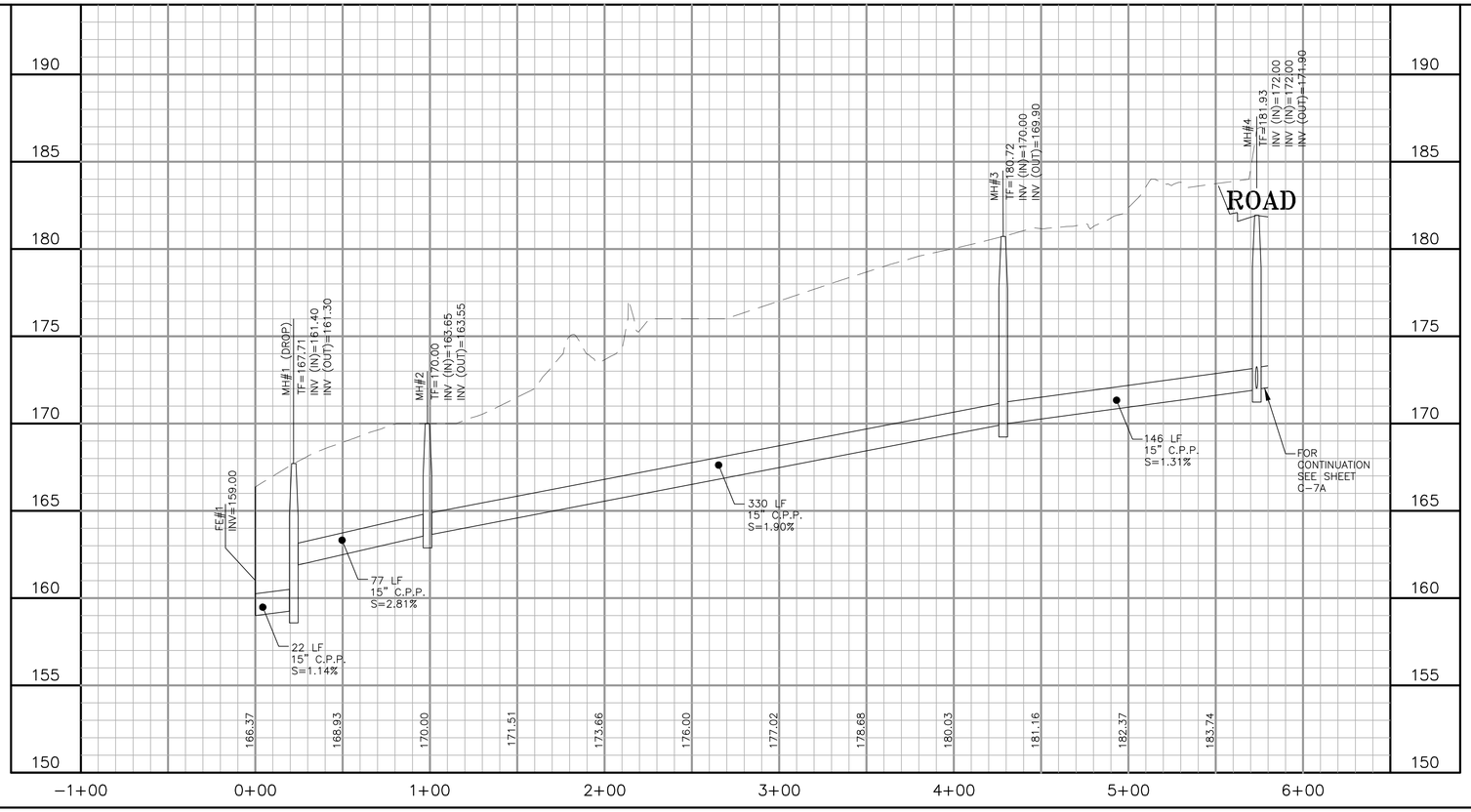

NOTE:
THE CONTRACTOR SHALL NOTIFY "CALL BEFORE YOU DIG" AT LEAST 72 HOURS PRIOR TO THE START OF EXCAVATION, BY CALLING 1-800-922-4455.

REVISION			
NO.	DATE	DESCRIPTION	DRAWN BY	CHECKED BY

COPYRIGHT © 2020 THESE PLANS ARE THE PROPERTY OF DYMAR, PREPARED AS AN INSTRUMENT OF SERVICE THEREFORE, AS SUCH, THEY MUST REMAIN THE PROPERTY OF DYMAR. THE PLANS ARE TO BE USED ONLY FOR THE PROJECT. DYMAR DOES NOT GUARANTEE THESE PLANS TO REFLECT THE TRUE CONDITIONS. THE CONTRACTOR SHALL VERIFY ALL FIELD CONDITIONS AND DIMENSIONS AND IS RESPONSIBLE FOR NOTIFYING DYMAR IF A DISCREPANCY EXISTS. THERE AFTER DYMAR SHALL HAVE FINAL SAY.

DYMAR
800 Main Street South - Southbury, CT. 06488 - (203) 267-1046 - Fax (203) 267-1547
ENGINEERING · PLANNING · SURVEYING · DEVELOPMENT SERVICES

DRAWINGS TO BE USED FOR LAND USE SUBMISSIONS ONLY
NOT FOR CONSTRUCTION

CLIENT: Estate of Dina M. & James S. Belta
128 Bayberry Lane
Westport, Connecticut 06880

PROJECT: Open Space Residential Subdivision
128 Bayberry Lane
Westport, Connecticut 06880

TITLE: Drainage Plan & Profile

NOT VALID WITHOUT SIGNATURE AND ORIGINAL SEAL

MARK E. LANCOR, P.E. #12369

DATE:	05/14/2020
SCALE:	AS NOTED
DESIGNED BY:	M.E.L.
DRAWN BY:	C.B.B.
CHECKED BY:	M.E.L.
JOB NO:	00934
DRAWING NO:	C-7B

F:\00934 - Bayberry Lane-Westport\Civil\Dwg\007.dwg, 7B, 5/13/2020 12:22:38 PM, gemus, AutoCAD PDF (Web and Mobile).pc3, ARCH full bleed D (24.00 x 36.00 inches), 1:1

NOTES:
1. THRUST BLOCK TO BE 1'-6" HIGH, 2'-0" WIDE AND LENGTH AS REQUIRED TO MEET UNDISTURBED EARTH (2'-6" MIN.). DO NOT ENCASE JOINTS.
2. LENGTH AND WIDTH OF DRAINAGE PIT SUFFICIENT TO PROVIDE 10 CUBIC FEET OF FOUNDATION STONE (MINIMUM) BELOW WASTE OPENINGS.
3. COVER FOUNDATION STONE WITH 6 MIL POLYETHLYENE.
4. RESTRAIN ALL JOINTS FROM MAIN TO HYDRANT.
5. PIPE, FITTINGS, AND HYDRANT VALVES TO BE AS PER WATER COMPANY SPECIFICATIONS FOR THE SIZE AND PRESSURE RATING.

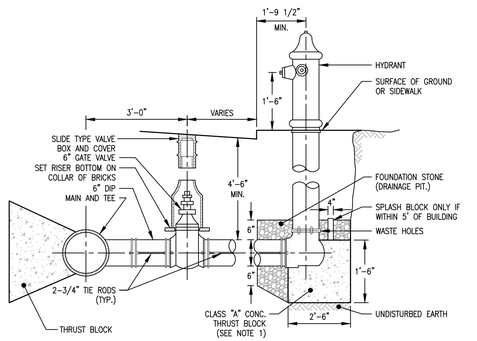

UTIL 122 — TYPICAL HYDRANT AND GATE VALVE DETAIL
N.T.S.

NOTES:
1. 4000 PSI CONCRETE SHALL BE USED FOR ALL PRECAST BASES, SUMPS, TRANSITION, RISER AND CORBEL SECTIONS.
2. REINFORCING AND SPECIFICATIONS SHALL CONFORM TO ASTM C-478, LATEST REVISED EDITION. UNUSED KNOCKOUTS SHALL BE BRICKED UP. RUBBER BOOTS OR LOCK GASKETS SHALL BE PROVIDED WHERE PIPE ENTERS OR LEAVES MANHOLE.
3. MANHOLE PIPE STUBS SHALL NOT EXCEED 2'-0" IN LENGTH AND SHALL BE PLUGGED WATER TIGHT.
4. FRAMES AND COVERS SHALL BE CAMPBELL FOUNDRY OR APPROVED EQUAL. AS SPECIFIED BY THE MUNICIPAL STANDARDS. CASTINGS SHALL BE PROVIDED WITH THE LETTERS "DRAIN" OR "SEWER", AS REQUIRED.

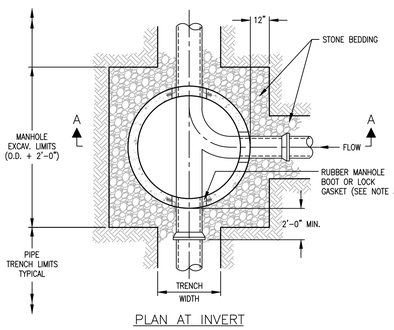

PLAN AT INVERT

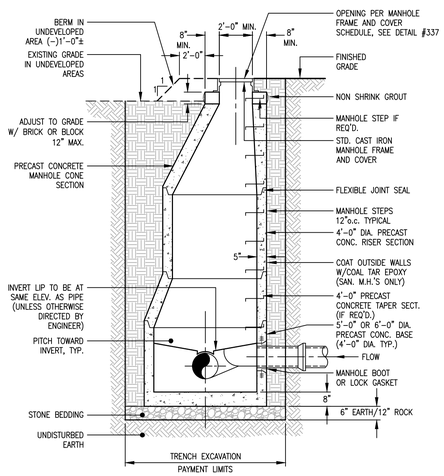

SECTION A–A

STRM 060 — PRECAST CONCRETE MANHOLE DETAIL
N.T.S.

DESIGN PARAMETER GUIDELINES FOR WATER QUALITY IMPROVEMENT

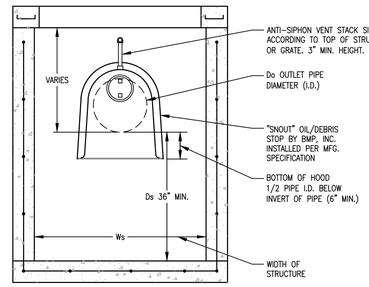

RULE # 1– AT AN ABSOLUTE MINIMUM, STRUCTURE INTERNAL DIMENSIONS MUST BE AT LEAST LARGE ENOUGH TO ACCOMMODATE EXTERNAL DIMENSIONS OF THE SNOUT, AND ALLOW FOR A PERSON TO INSTALL IT. REFER TO BMP, INC. CAD DETAILS FOR PART DIMENSIONS.

RULE #2– USE ONLY "F" SERIES SNOUTS FOR RECTANGULAR OR SQUARE STRUCTURES, AVAILABLE IN 12", 18", 24", 30", 48", AND 96" SIZES. USE ONLY "R" SERIES SNOUTS FOR ROUND STRUCTURES, AVAILABLE IN 12", 18", 24", AND, 30" SIZES.

SUMP DEPTH (Ds)– SUMP DEPTH SHOULD BE A MINIMUM OF 36" FOR ANY NEW CONSTRUCTION FOR PIPES 12" AND LESS. FOR 15"–18" PIPE MIN. DEPTH SHOULD BE 48". OPTIMAL SIZING IS AT LEAST 2.5X TO 3X OUTLET PIPE DIAMETER (Dp) FOR MAXIMUM POLLUTANT REMOVAL EFFICIENCY AND MINIMAL CLEANOUT FREQUENCY.

STRUCTURE DIMENSIONS– PLAN DIMENSIONS FOR A STRUCTURE SHOULD BE APPROX. 7X AREA OF OUTLET PIPE FOR MAXIMUM POLLUTANT REMOVAL EFFICIENCY AND MINIMAL CLEANOUT FREQUENCY.
(SEE MAINTENANCE FREQUENCY CALCULATION SHEET FOR MORE INFORMATION)

IMPORTANT NOTICE: DO NOT CONFUSE PIPE O.D WITH PIPE I.D. A SNOUT FITS OVER A PIPE, NOT IN IT. THUS, SNOUT MUST BE SIZED TO FIT OVER PIPE OPENING IN STRUCTURE. SNOUTS ARE AVAILABLE FOR ROUND STRUCTURES TO ACCOMODATE PIPES OF 30" O.D. MAX. FOR PIPES 30" O.D. AND ABOVE, USE SQUARE OR RECTANGULAR STRUCTURES.

SIZING EXAMPLES:

STRUCTURE OUTLET HOLE SIZE	SNOUT SIZE
11.9" O.D. OR LESS	12 F or R
12.0"–17.9" O.D.	18 F or R
18.0"–23.9" O.D.	24 F or R
24.0"–29.9" O.D.	30 F or R
30.0"–47.9" O.D.	48 F
48.0"–95.9" O.D.	96 F

U. S. Patent # 6126817

BMP, INC.
53 MT. ARCHER ROAD, LYME, CT. 06371
(800) 504-8008 FAX: (860)434-3195

DESCRIPTION	DATE	SCALE
SNOUT SIZING CHART	04/24/00	NONE
	DRAWING NUMBER	SP–SI

STRM 314B — BMP SNOUT TYPICAL DETAIL
N.T.S.

NOTES:
1. SIDE SLOPES TO BE STABILIZED WITH AN APPROVED METHOD AS SPECIFIED BY THE ENGINEER.

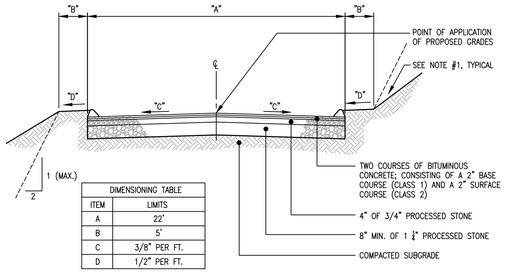

DIMENSIONING TABLE	
ITEM	LIMITS
A	22'
B	5'
C	3/8" PER FT.
D	1/2" PER FT.

PV/VEH 003Q — TYPICAL ROAD SECTION
N.T.S.

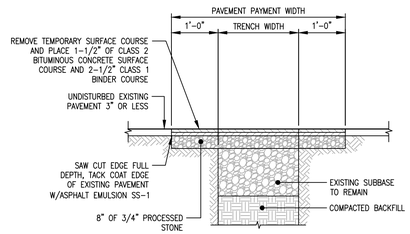

PV/VEH 062D — PERMANENT PAVEMENT REPLACEMENT DETAIL
N.T.S.

NOTES:
1. MAINTAIN EXISTING PAVEMENT PROFILE FOR ALL DISTURBED LIMITS.
2. TACK COAT BETWEEN BITUMINOUS COURSES AT 0.4 GAL/SY MIN.
3. SAW CUTS MUST BE STRAIGHT AND TO SQUARE LINES AT TRANSITIONS.
4. SPECIFICATIONS SHALL SATISFY STATE DOT MANUAL OF PRACTICE.

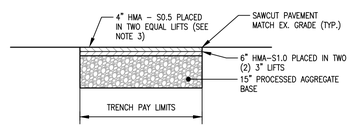

PV/VEH 061B — TEMPORARY PAVEMENT TRENCH REPAIR DETAIL
N.T.S.

NOTES:
1. TAPER TRANSITION FOR CHANNEL INSTALLATIONS AS REQUIRED TO MATCH CHANNEL WIDTH, OR AS INDICATED ON THE PLANS.
2. ALL TOTAL WIDTHS AND LENGTHS FOR SPREADER PAD INSTALLATIONS ARE AS INDICATED ON PLANS.
3. FILTER FABRIC SHALL BE A WOVEN MONOFILAMENT FABRIC AS MANUFACTURED BY MIRAFI FABRIC 600X OR AMOCO FABRICS CO PROPEX 1325.

RIPRAP AS SPECIFIED ELSEWHERE ON THE DRAWINGS. DEPTH SHALL BE:
D = MODIFIED 15"
= INTERMEDIATE 27"
= STANDARD 45"

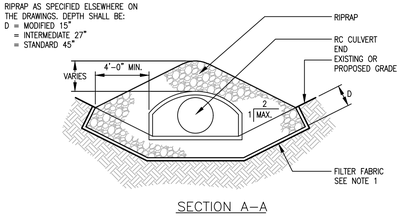

SECTION A–A

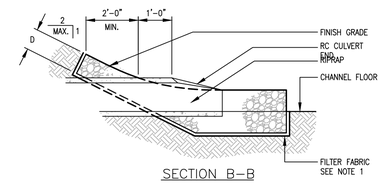

SECTION B–B

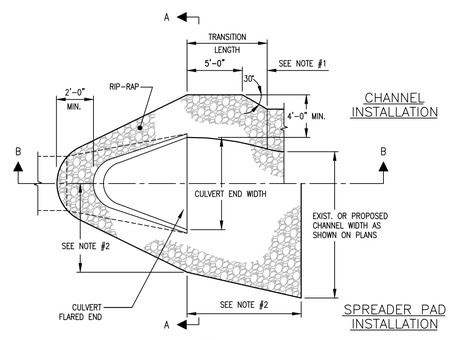

PLAN

STRM 004 — RIPRAP SPLASHPAD DETAIL
N.T.S.

NOTES:
1. CALL "BEFORE YOU DIG" (1-800-922-4455).
2. PROVIDE P.V.C. CONDUIT WITH NYLON PULL CORD AS REQUIRED FOR EACH INDIVIDUAL UTILITY LINE. CONTRACTOR TO COORDINATE WITH INDIVIDUAL UTILITY COMPANIES THE DIAMETER OF CONDUIT REQUIRED.
3. CONTRACTOR TO COORDINATE WITH EACH INDIVIDUAL UTILITY COMPANY AND THE DESIGN ENGINEER, ALL REQUIRED INSPECTIONS.
4. MACHINE DIGGING SHALL STOP NOT LESS THAN 18" FROM VAULTS, FOUNDATIONS, EQUIPMENT, CABLES AND POLES. TRENCHING SHALL BE COMPLETED BY HAND THEREAFTER.
5. ALL ELEC. BURIED CONDUITS SHALL BE IDENTIFIED BY A RED PLASTIC FILM MARKER TAPE, AS SPEC. BY THE UTIL. CO. THE MARKER TAPE SHALL RUN DIRECTLY ABOVE THE ENTIRE LENGTH OF EACH CONDUIT SECTION AND SHALL HAVE MINIMUM VERTICAL SEPARATION OF 12".
6. A MINIMUM SEPARATION OF 30" SHALL BE MAINTAINED BETWEEN ELECTRICAL CONDUIT AND WATER SERVICE LINES. SEPARATION BETWEEN ELECTRICAL CONDUIT AND WATER MAIN SHALL BE 36".
7. A MINIMUM SEPARATION OF 30" SHALL BE MAINTAINED BETWEEN ELECTRICAL CONDUIT AND GAS SERVICE LINES. JOINT TRENCHING IS NOT PERMITTED FOR MAIN GAS LINES.

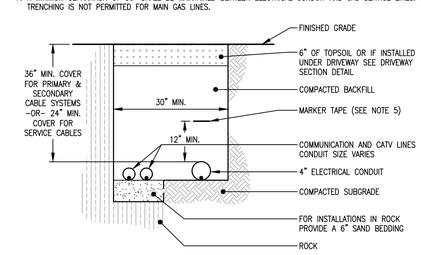

UTIL 014 — UTILITY LINE TRENCHING DETAIL
N.T.S.

NOTES:
1. FOR UNSHEETED TRENCH WHERE PIPE O.D. IS 6" OR LESS THAN, WIDTH (W) 2'-6"; WHERE PIPE O.D. IS GREATER THAN 6" BUT LESS THAN OR EQUAL TO 36" THEN, W = O.D. + 2'-0"; WHERE PIPE O.D. IS GREATER THAN 36" THEN, W = O.D. + 3'-0". PAYMENT FOR TRENCHING, BEDDING AND BACKFILL TO BE INCLUDED IN THE COST PER LINEAR FOOT OF THE PIPE.
2. IF SUITABLE GRANULAR PIPE BEDDING MATERIAL IS AVAILABLE FROM ON SITE EXCAVATIONS, IT SHALL BE UTILIZED PROVIDED IT CONFORMS WITH THE "STANDARD SPECIFICATIONS", AND IS APPROVED BY THE ENGINEER.
3. TYPICAL FOR PIPE MATERIALS SPECIFIED, AS CAST IRON (C.I.), CONCRETE PIPE, VITRIFIED CLAY PIPE, DUCTILE IRON PIPE OR STEEL PIPE.
4. SHEETING OR SHORING OF TRENCH WALLS, WHERE UNSUITABLE CONDITIONS EXIST, IS THE SOLE RESPONSIBILITY OF THE CONTRACTOR.
5. FOR ROCK REMOVAL DEPTHS (H) GREATER THAN 10', INCREASE WIDTH (W) BY 6".

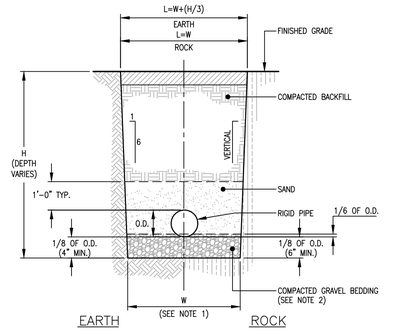

STRM 016 — CLASS 'C' TRENCH DETAIL
N.T.S.

NOTES:
1. FOR UNSHEETED TRENCH WHERE PIPE O.D. IS 6" OR LESS THAN, WIDTH (W) 2'-6"; WHERE PIPE O.D. IS GREATER THAN 6" BUT LESS THAN OR EQUAL TO 36" THEN, W = O.D. + 2'-0"; WHERE PIPE O.D. IS GREATER THAN 36" THEN, W = O.D. + 3'-0". PAYMENT FOR THE TRENCHING, BEDDING, FILTER FABRIC AND BACKFILL TO BE INCLUDED IN THE COST PER LINEAR FOOT OF THE PIPE.
2. IF SUITABLE GRANULAR PIPE BEDDING MATERIAL IS AVAILABLE FROM ON SITE EXCAVATIONS, IT SHALL BE UTILIZED PROVIDED IT CONFORMS WITH THE "STANDARD SPECIFICATIONS", AND IS APPROVED BY THE TOWN ENGINEER.
3. TYPICAL FOR ALL FLEXIBLE PIPE MATERIALS I.E. C.P.P., P.V.C., POLYETHYLENE, F.R.P., AND A.B.S. TRUSS.
4. SHEETING OR SHORING OF TRENCH WALLS, WHERE UNSUITABLE CONDITIONS EXIST, IS THE SOLE RESPONSIBILITY OF THE CONTRACTOR.
5. FOR ROCK REMOVAL DEPTHS GREATER THAN 10', INCREASE WIDTH (W) BY 6".

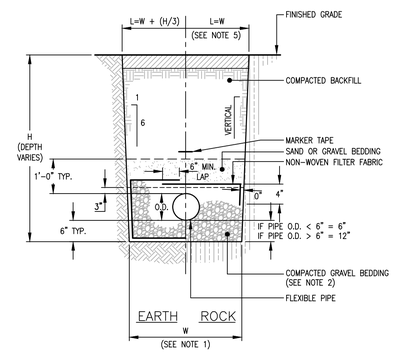

STRM 017 — CLASS 'B' TRENCH DETAIL
N.T.S.

NOTES:
1. 4000 PSI CONCRETE SHALL BE USED FOR ALL PRECAST BASES, SUMPS, TRANSITION, RISER AND CORBEL SECTIONS. REINFORCING AND SPECIFICATIONS SHALL CONFORM TO ASTM C-478, LATEST REVISED EDITION.
2. STYLE INLET SHALL BE AS SPECIFIED ON THE DRAWINGS OR INDICATED ELSEWHERE IN THE CONSTRUCTION SPECIFICATIONS.

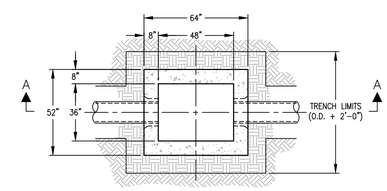

PLAN AT RISER SECTION

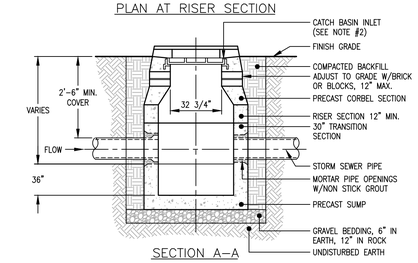

SECTION A–A

STRM 058 — PRECAST CONCRETE CATCH BASIN DETAIL
N.T.S.

NOTE:
1. THE CONTRACTOR SHALL NOTIFY "CALL BEFORE YOU DIG" AT LEAST 72 HOURS PRIOR TO THE START OF EXCAVATION, BY CALLING 1-800-922-4455.

NO.	DATE	DESCRIPTION	DRAWN BY	CHECKED BY
		REVISION		

COPYRIGHT © 2020. THESE PLANS ARE THE PROPERTY OF DYMAR, PREPARED AS AN INSTRUMENT OF SERVICE. PROPRIETARY INFORMATION DISCLOSED HEREIN CANNOT BE DISCLOSED OR OTHERWISE DISPOSED OF WITHOUT THE PERMISSION OF THE PROJECT. DYMAR DOES NOT GUARANTEE THESE PLANS TO REFLECT THE TRUE CONDITIONS. THE CONTRACTOR SHALL VERIFY ALL FIELD CONDITIONS AND DIMENSIONS AND IS RESPONSIBLE FOR NOTIFYING DYMAR IF A DISCREPANCY EXISTS. THERE AFTER DYMAR SHALL WAIVE FINAL SIGN.

DYMAR
800 Main Street South · Southbury, Ct. 06488 · (203) 267-1046 · Fax (203) 267-1547
ENGINEERING · PLANNING · SURVEYING · DEVELOPMENT SERVICES

DRAWINGS TO BE USED FOR LAND USE SUBMISSIONS ONLY
NOT FOR CONSTRUCTION

CLIENT: Estate of Dina M. & James S. Belta
128 Bayberry Lane
Westport, Connecticut 06880

PROJECT: Open Space Residential Subdivision
128 Bayberry Lane
Westport, Connecticut 06880

TITLE: Paving, Storm Sewer and Utility Details

NOT VALID WITHOUT SIGNATURE AND ORIGINAL SEAL

MARK E. LANCOR, P.E. #12369

DATE:	05/14/2020
SCALE:	AS NOTED
DESIGNED BY:	M.E.L.
DRAWN BY:	C.B.B.
CHECKED BY:	M.E.L.
JOB NO:	00934
DRAWING NO:	C-8A

F:\00934 - Bayberry Lane-Westport\Civil\Dwg\008A.dwg, BA, 5/13/2020 12:22:40 PM, gemas, AutoCAD PDF (Web and Mobile).pc3, ARCH full bleed D (24.00 x 36.00 Inches), 1:1

NOTES:
1. MARKER TO BE LOCATED AT MAXIMUM 100' INTERVALS AT LOCATIONS AS APPROVED BY THE TOWN OF WESTPORT'S INLAND WETLANDS ENFORCEMENT OFFICER.

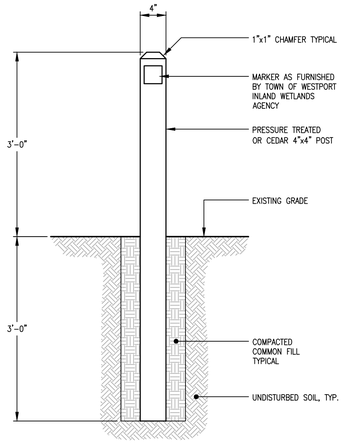

WETL 092 — WETLANDS REGULATED AREA MARKER DETAIL
N.T.S.

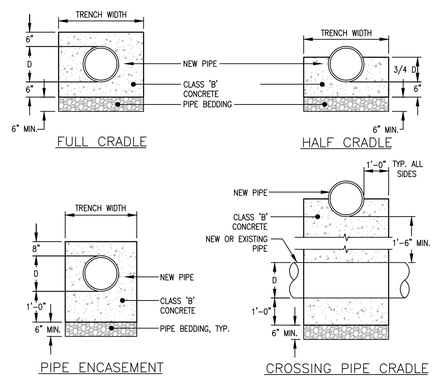

UTIL 018 — PIPE CRADLE & ENCASEMENT DETAIL
N.T.S.

NOTES:
1. FILTER FABRIC SHALL BE A WOVEN MONOFILAMENT FABRIC AS MANUFACTURED BY MIRAFI FABRIC LINER 500X OR AMOCO FABRICS CO. PROPEX 1325.

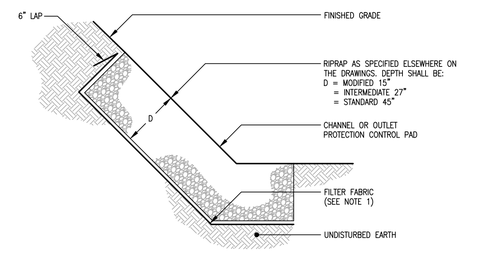

SEC 038 — TYPICAL RIPRAP INSTALLATION DETAIL
N.T.S.

NOTES:
1. THE CONTRACTOR SHALL NOTIFY THE ENGINEER PRIOR TO THE START OF CONSTRUCTION/INSTALLATION OF RAIN GARDEN MATERIALS.
2. GRADE SURFACE OF INSTALLATION AREA SO THAT EARTH IS CLEAN OF ALL ROOTS AND OBSTRUCTIONS. SCARIFY SUBSOIL PRIOR TO INSTALLATION OF RAIN GARDEN MATERIALS.
3. ALL RAIN GARDEN MATERIALS SHALL BE APPROVED BY THE ENGINEER PRIOR TO CONSTRUCTION AND SHALL CONFORM TO THE FOLLOWING SPECIFICATIONS:
   MULCH LAYER – SHALL BE A SHREDDED HARDWOOD ONLY.
   PLANTING SOIL LAYER – SHALL BE A SCREENED TOPSOIL MIXED WITH CLEAN SAND. SAND SHALL MEET ASTM C-33 WITH GRAIN SIZE OF 0.02–0.04".
   NON-WOVEN FILTER FABRIC – SHALL BE 160N WITH A MINIMUM PUNCTURE STRENGTH OF 95 LBS. AS MANUFACTURED BY MIRAFI INC. OR APPROVED EQUAL.
   UNDERDRAIN LAYER – SHALL BE 1-1/4" – 1-1/2" WASHED STONE.
4. SURFACE PLANTING SEED MIXTURE SHALL BE BE NEW ENGLAND CONSERVATION/WILDLIFE MIX. BY NEW ENGLAND WETLAND PLANTS, INC. OR APPROVED EQUAL. APPLICATION RATE: 1 LB/1,750 SF.

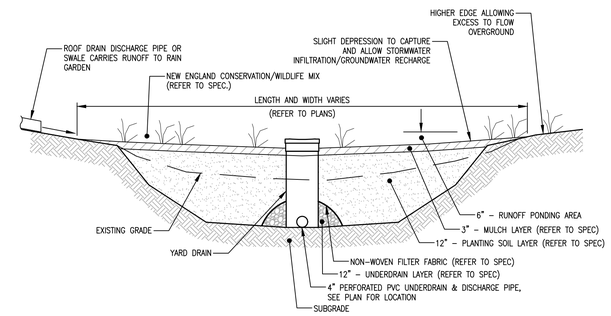

STRM 329B — TYPE 'A' RAIN GARDEN DETAIL IN A SUMP CONDITION
N.T.S.

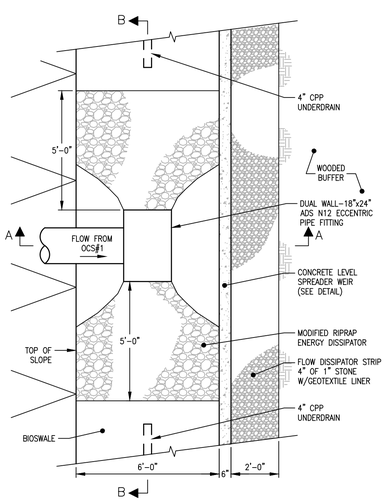

STRM 320H — LEVEL SPREADER PLAN VIEW & DISCHARGE
N.T.S.

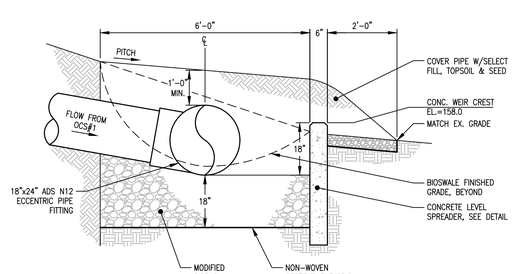

STRM 320I — LEVEL SPREADER & MANIFOLD PIPE OUTLET SECTION A–A
N.T.S.

NOTE:
1. BIOSWALE MIX SHALL BE 50–60% CONCRETE SAND 20–35% DECOMPOSED LEAF COMPOST, AND 15–20% SCREENED LOAM.

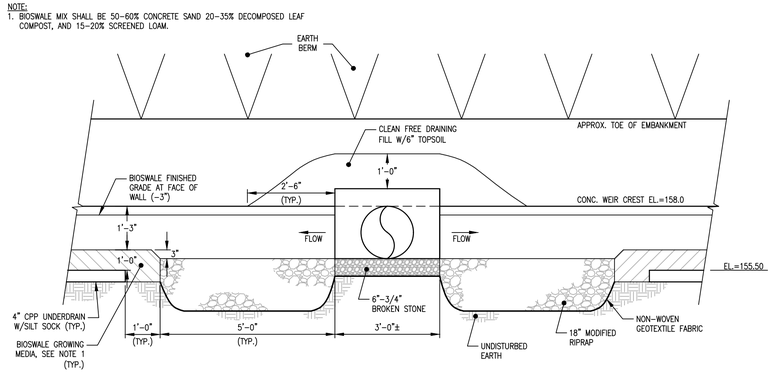

STRM 320J — LEVEL SPREADER & MANIFOLD PIPE OUTLET SECTION B–B
N.T.S.

NOTES:
1. "CAST-IN-PLACE" CONCRETE SHALL BE A MIN. 3,000 PSI.
2. PRE-CAST CONCRETE CAN BE SUBSTITUTED, AS APPROVED BY THE ENGINEER.
3. PROVIDE CONTROL JOINTS EVERY 10' MIN. AND CONSTRUCTION/EXPANSION JOINTS SHALL BE PROVIDED @ 30' MAX INTERVALS; 1/2" WIDE, WITH COMPRESSIBLE FILLER AND A #4 REBAR WITH SLEEVE, 12" LONG, EQUALLY SPACED @ 1'-0" O.C.

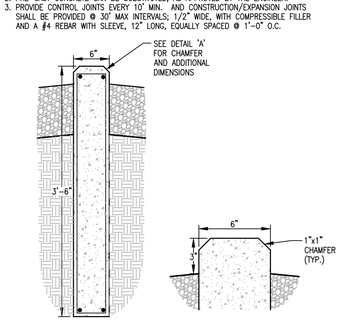

STRM 421B — CONCRETE WEIR DETAIL
N.T.S.

REVISION			
NO.	DATE	DESCRIPTION	DRAWN BY	CHECKED BY

COPYRIGHT © 2020. THESE PLANS ARE THE PROPERTY OF DYMAR, PREPARED AS AN INSTRUMENT OF SERVICE SOLELY FOR USE IN THE PERMITTING, CONSTRUCTION AND DEVELOPMENT OF THE PROPERTY SHOWN ON THE PROJECT. DYMAR DOES NOT GUARANTEE THESE PLANS TO REFLECT THE TRUE CONDITIONS. THE CONTRACTOR SHALL VERIFY ALL FIELD CONDITIONS AND DIMENSIONS AND IS RESPONSIBLE FOR NOTIFYING DYMAR IF A DISCREPANCY EXISTS. THERE AFTER, DYMAR SHALL HAVE FINAL SAY.

DYMAR
800 Main Street South · Southbury, Ct. 06488 · (203) 267-1046 · Fax (203) 267-1547
ENGINEERING · PLANNING · SURVEYING · DEVELOPMENT SERVICES

DRAWINGS TO BE USED FOR LAND USE SUBMISSIONS ONLY
NOT FOR CONSTRUCTION

CLIENT: Estate of Dina M. & James S. Belta
128 Bayberry Lane
Westport, Connecticut 06880

PROJECT: Open Space Residential Subdivision
128 Bayberry Lane
Westport, Connecticut 06880

TITLE: Miscellaneous Site Details

NOT VALID WITHOUT SIGNATURE AND ORIGINAL SEAL

MARK E. LANCOR, P.E. #12369

DATE:	05/14/2020
SCALE:	N.T.S.
DESIGNED BY:	M.E.L.
DRAWN BY:	C.B.B.
CHECKED BY:	M.E.L.
JOB NO.:	00934
DRAWING NO.:	C-8B

1 2

F:\00934 - Bayberry Lane-Westport\Civil\Dwg\00934B.dwg, 8B, 5/13/2020 12:22:42 PM, gensis, AutoCAD PDF (Web and Mobile).pc3, ARCH full bleed D (24.00 x 36.00 Inches), 1:1

FORMATION OF EMBANKMENT FOR BASINS/PONDS

Note: Prior to the commencement of construction, the developer shall hire a Soils Engineer to review the design drawings and specifications pertaining to detention embankment construction.

The Soils Engineer Shall be responsible for inspection and approval of the following:

a. The existing soils along the sides of Detention Basins that will remain in place after the detention basins have been excavated. The Soils Engineer shall determine if the material meets the requirements for the impervious embankment core, and if not what measures will need to be implemented.

b. The existing soils down gradient of the Detention Basins to determine if any modifications need to be implemented.

c. The suitability of all embankment foundations prior to placement of any embankment fill.

1. MATERIALS

a. All fill materials shall be obtained from required excavations of designated borrow areas. Fill material shall contain no frozen material, sod, brush, roots, or other organic material. Earth embankments shall contain no stones or rock particles over six inches in diameter. The material used in the core portion of the embankment shall be the most impervious material obtained from the borrow areas, as required. The more pervious materials shall be used in the outer fill portion of the embankment as shown on the plans.

b. The impervious core fill material shall be glacial till, to be provided from either on-site or off-site sources in the quantities required for completion of the work. Fill to be approved by the Engineer prior to placement. Glacial till shall consist of hard and durable particles or fragments and shall be free from organic matter and other objectionable materials. Glacial till shall generally conform to the following gradation limits:

U.S. Standard Sieve Size	Percentage Passing By Weight
3 inch	100
No. 4	60–95
No. 10	50–95
No. 40	30–95
No. 100	20–65
No. 200	10–40

2. EMBANKMENT FOUNDATION PREPARATION

a. Areas where embankments are to be formed shall be cleared and grubbed of all topsoil and other organic materials to a depth of at least 24 inches. Design Engineer to inspect and approve the suitability of the embankment foundation. Unless otherwise specified on the drawings, embankment foundation areas shall be scarified to a depth of three inches minimum prior to placement of fill material.

3. PLACEMENT

a. No fill shall be placed until the foundation preparation and excavations in the foundation have been completed and approved by the Soils Engineer. No fill shall be placed on a frozen surface nor shall frozen material be incorporated.

b. Embankment material shall be placed in 12 inch thick loose lifts. Lifts should be placed in flat, horizontal layers. During construction, the surface of the fill shall be sloped to drain. Each layer or lift shall extend over the entire area of the fill.

c. The fill shall be free from lenses, pockets, streaks, or layers of material differing substantially in texture or gradation from the surrounding material. The more pervious material shall be placed in the outside portion of the embankment or as indicated on the drawings. The finished fill shall be shaped and graded to the lines and grade shown on the drawings.

d. Pipe backfill shall be placed in 6–8 inch loose lifts. Lifts should be placed in flat, horizontal layers. Backfill shall be brought up uniformly around the outlet pipe and flared end section.

4. MOISTURE CONTROL

a. The moisture content of materials in the embankment shall be controlled to meet the requirements of Section 5, "Compaction of Embankment". When necessary, moisture shall be added by use of approved sprinkling equipment. Water shall be added uniformly and each layer shall be thoroughly disked or harrowed to provide proper mixing. Any layer found too wet for proper compaction shall be allowed to dry before rolling. Placing or rolling of material on earth fills will not be permitted during or immediately after rainfalls which increase the moisture content beyond the limit of satisfactory compaction. The earth fill shall be brought up uniformly and its top shall be kept graded and sloped so that a minimum of rainwater will be retained thereon. Compacted earth fill damaged by washing shall be acceptably replaced by the contractor.

5. COMPACTION OF EMBANKMENT

a. Embankment material shall be compacted to 95% of the standard proctor density at near optimum moisture content and by the compaction equipment specified herein. The compaction equipment shall traverse the entire surface of each layer of fill material.

b. Approved tamping rollers shall be used for compacting all parts of the embankments which they can effectively reach. The contractor shall demonstrate the effectiveness of the roller by actual soil compaction results of the soil to be used in the embankment with laboratory work performed by an approved soil testing laboratory. Compaction tests shall include modified proctor and nuclear density tests made at the engineer's discretion. A minimum of three proctors shall be performed and density tests shall be randomly provided every 1,500 square feet.

c. Pipe backfill shall be compacted by hand tamping with mechanical tampers. Heavy equipment shall not be operated within two feet of any structure. Equipment shall not be allowed to operate over the outlet conduits until there is 24 inches of fill over the pipe conduits.

6. FINISHING EMBANKMENTS

a. The embankments shall be constructed to the elevations, lines, grades and cross sections as shown on the drawings. The embankments shall be maintained in a manner satisfactory to the Engineer and Town and surfaces shall be compact and accurately graded before topsoil is placed on them. The contractor shall check the embankment slopes with stringlines to insure that they conform to the slopes given on the plans and are uniform for the entire length of the slope.

7. MISCELLANEOUS CONDITIONS

a. Clearing limits for dike embankment areas shall extend 25 feet from the toe of the slope, unless otherwise directed by the Engineer.

b. The area at the toe of the dike is to be dewatered prior to placement of embankment fill. If field conditions warrant, a toe drain trench shall be installed for dewatering when directed by the Engineer.

c. Test pits can be ordered by the Engineer or Town to locate or confirm the elevation and condition of existing soils or the content of the embankment fill at any time during construction. This work shall be done at no additional cost to the Owner.

d. No rock or deleterious material shall be placed within the core area or water side of the fill area. Disposal of rock at the fill outlet side shall only be permitted at the toe and they shall not be nested. The fill in-between shall be placed and compacted as specified within the standard specifications.

e. If apparent changes occur in the fill material, additional sieve analyses of the fill can be ordered by the Engineer at no additional cost to the Owner.

f. Engineer to inspect pond construction, certify that pond was constructed as designed, and provide an asbuilt.

NOTES:
1. DETAIL IS FOR ILLUSTRATION PURPOSES ONLY OF UPPER PRECAST SECTION. INSTALL STRUCTURE IN ACCORDANCE WITH STANDARD CATCH BASIN DETAIL.
2. CONTRACTOR IS TO SUBMIT SHOP DRAWINGS TO ENGINEER FOR REVIEW AND APPROVAL PRIOR TO FABRICATION OF THE STRUCTURE.
3. THE STRUCTURE SHALL BE INSTALLED WATERTIGHT WITH ALL JOINTS PARGED WITH WATER PLUG, AND FROM 6" BELLOW THE INLET WEIR AND DOWN THE EXTERIOR WALLS AND BOTTOM SHALL BE EPOXY COATED.

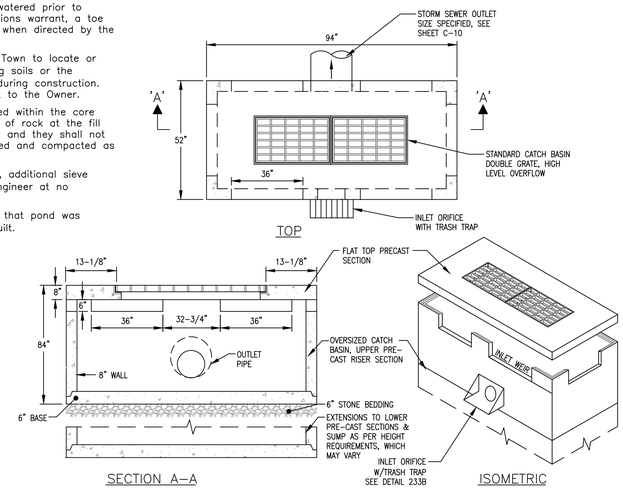

STRM 103B

OUTLET CONTROL STRUCTURE #1 & #2 INLET DETAIL

N.T.S.

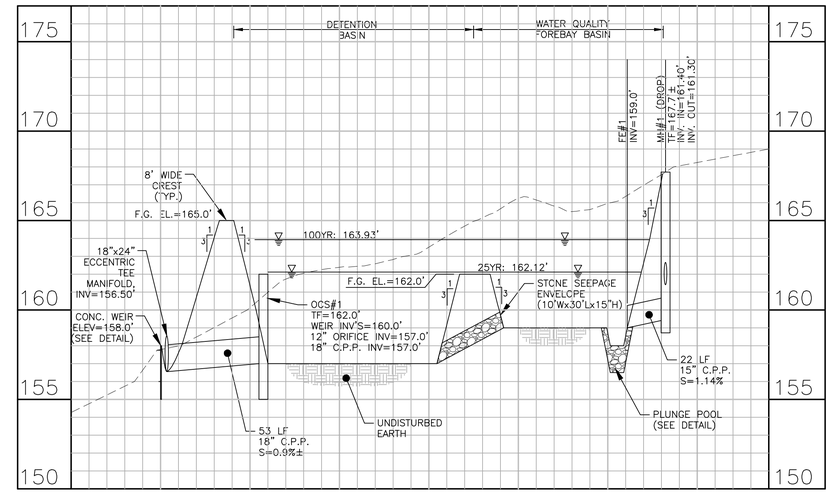

DETENTION/WATER QUALITY BASIN CROSS SECTION A-A

HORZ. SCALE: 1"=40'
VERT. SCALE: 1"=4'

NOTES:
1. CONTRACTOR IS TO SUBMIT SHOP DRAWINGS TO ENGINEER FOR REVIEW AND APPROVAL PRIOR TO FABRICATION OF THE STRUCTURE.
2. TRASH RACK TO BE PROVIDED WITH A MINIMUM OF SIX STAINLESS STEAL ANCHOR BOLTS PER RACK. RACK TO BE DELIVERED WITH 5/8" DIAMETER HOLES PREDRILLED IN THE APPROPRIATE LOCATIONS.
3. TRASH RACK FOR ALL WEIRS. SIDE VIEW FOR ILLUSTRATION ONLY. REFER TO SCHEDULE FOR HEIGHT AND WIDTH FOR EACH STRUCTURE.
4. RELEASE RATES ARE BASED ON AN ANALYSIS WITH 50% OF THE EFFECTIVE AREA PLUGGED.
5. REFERENCE IS MADE TO DETAIL 103B FOR STRUCTURE INLET DETAILS.

STRUCTURE	H	W	HW
OCS#1	18"	36"	6"

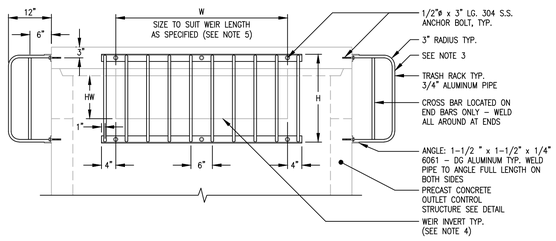

STRM 093

OCS WEIR TRASH RACK DETAIL

N.T.S.

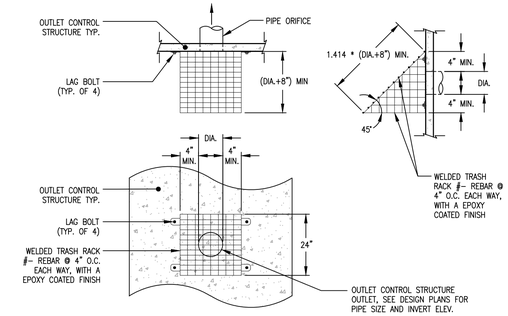

STRM 233B

OCS ORIFICE TRASH RACK DETAIL

N.T.S.

NOTES:
1. FILTER FABRIC SHALL BE PLACED ON TOP, BOTTOM, AND SIDES OF SEEPAGE ENVELOPE. MIN. FLOW RATE @ 130 GALLONS/SFT.
2. WHERE THE CONTRACTOR IS REQUIRED TO OVER EXCAVATE TO ACCEPTABLE SUBGRADE MATERIAL, THE VOLUME MAY BE REPLACED WITH A CLEAN FREE DRAINING MATERIAL IN LIEU OF STONE AS APPROVED BY THE ENGINEER.
3. REINFORCED TURF MAT SHALL BE ARMORMAX-EROSION CONTROL BY PROPEX GEOSOLUTIONS, 1-800-621-1273 OR MIRAFI TM145 BY TENCATE GEOSYNTHETICS , 1-706-693-2226.

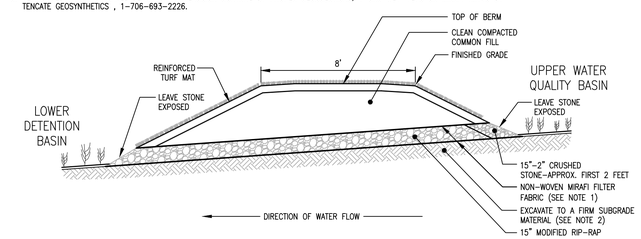

STRM 006F

WATER QUALITY BASIN SEEPAGE ENVELOPE

N.T.S.

DIMEN.	PIPE DIAMETER "D"							
	15"	18"	21"	24"	30"	36"	42"	48"
A	11.25'	12.50'	15.75'	17.00'	21.50'	24.00'	30.50'	33.00'
B	6.50'	8.00'	9.50'	10.00'	13.00'	14.00'	19.00'	20.00'
C	1.00'	1.00'	1.50'	1.50'	2.00'	2.00'	3.00'	3.00'

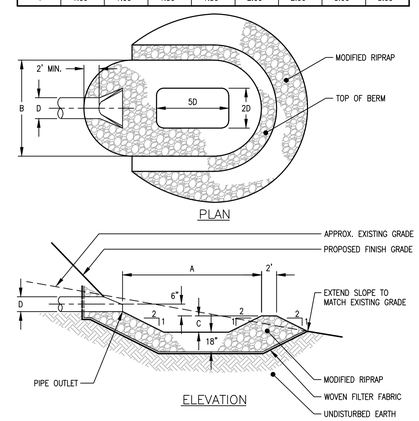

STRM 011

PLUNGE POOL DETAIL

N.T.S.

NOTES:
1. INSTALL ON STEEPLY SLOPING PIPE. SEE PLANS FOR INSTALLATION LOCATIONS OR AT ENGINEER'S DIRECTION.
2. RIPLEY'S DAM (AS MANUFACTURED BY MCRIP MANUFACTURING, DUNHAM NH, TEL 603-868-5176) IS AN ACCEPTABLE ALTERNATE SUBSTITION.

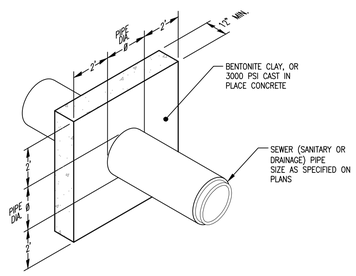

STRM 095

TRENCH ANTI-SEEPAGE COLLAR DETAIL

N.T.S.

NOTES:
1. STRAW BLANKETS SHALL BE S150, AS MANUFACTURED BY NORTH AMERICAN GREEN, OR APPROVED EQUAL. REFER TO LANDSCAPE PLAN FOR ADDITIONAL SEED APPLICATION MIXTURES.
2. GEOTEXTILE FABRIC LINER SHALL BE MIRAFI 500X, OR APPROVED EQUAL, AND IS TO BE USED AT THE DISCRETION OF THE ENGINEER UPON INSPECTION OF THE SOIL CONDITIONS.
3. MIRAMAT SHALL BE AS MANUFACTURED BY MIRAFI, INC., OR APPROVED EQUAL. INSTALL TO MODIFIED RIPRAP AS PER MANUFACTURER'S INSTRUCTIONS. MODIFIED RIPRAP OR ROCK REVETMENT UTILIZING ON-SITE MATERIALS SHALL BE ACCEPTABLE AS PER THE ENGINEERS INSTRUCTIONS. INSTALL LANDLOK STITCH-BONDED TRM (AS MANUFACTURED BY PROPEX GEOSOLUTIONS, 1-800-621-1273 OR APPROVED EQUAL) ALONG WET SIDE OF BASIN.

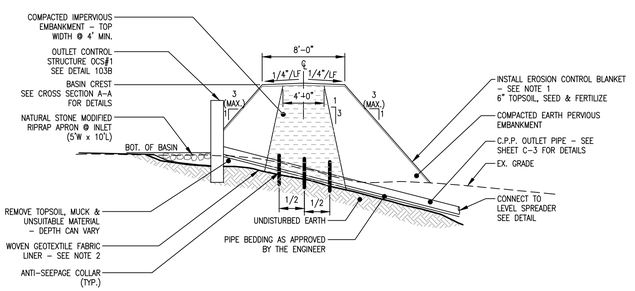

STRM 255P

TYPICAL DETENTION BASIN EMBANKMENT DETAIL

N.T.S.

NO.	DATE	REVISION DESCRIPTION	DRAWN BY	CHECKED BY

COPYRIGHT © 2020: THESE PLANS ARE THE PROPERTY OF DYMAR, PREPARED AS AN INSTRUMENT OF SERVICE. REPRODUCTION IN WHOLE OR IN PART WITHOUT WRITTEN CONSENT OF DYMAR IS STRICTLY PROHIBITED. THE PROJECT, DYMAR DOES NOT GUARANTEE THESE PLANS TO REFLECT THE TRUE CONDITIONS. THE CONTRACTOR SHALL VERIFY ALL FIELD CONDITIONS AND DIMENSIONS AND IS RESPONSIBLE FOR NOTIFYING DYMAR IF A DISCREPANCY EXISTS. THERE AFTER, DYMAR SHALL HAVE FINAL SAY.

DYMAR
800 Main Street South · Southbury, Ct. 06488 · (203) 267-1046 · Fax (203) 267-1547
ENGINEERING · PLANNING · SURVEYING · DEVELOPMENT SERVICES

DRAWINGS TO BE USED FOR LAND USE SUBMISSIONS ONLY
NOT FOR CONSTRUCTION

CLIENT: Estate of Dina M. & James S. Belta
128 Bayberry Lane
Westport, Connecticut 06880

PROJECT: Open Space Residential Subdivision
128 Bayberry Lane
Westport, Connecticut 06880

TITLE: Detention Basin, Storm Sewer and Embankment Details

NOT VALID WITHOUT SIGNATURE AND ORIGINAL SEAL

MARK E. LANCOR, P.E. #12369

DATE:	05/14/2020
SCALE:	N.T.S.
DESIGNED BY:	M.E.L.
DRAWN BY:	C.B.B.
CHECKED BY:	M.E.L.
JOB NO.:	00934
DRAWING NO.:	C-8C

F:\00934 - Bayberry Lane-Westport\Civil\Dwg\008C.dwg, 8C, 5/13/2020 12:22:44 PM, gemas, AutoCAD PDF (Web and Mobile).pc3, ARCH full bleed D (24.00 x 36.00 Inches), 1:1

CONSTRUCTION SPECIFICATIONS AND STANDARDS

A. MANHOLES, CATCH BASINS AND STRUCTURES:

1. Catch basins and manholes shall be constructed of class "A" concrete, prefabricated of precast sections in accordance with ASTM C-148, latest revised edition. The minimum compressive strength shall be 4,000 psi. Structures can be constructed in the field at the contractor's option if built in accordance with the standard specifications and drawings. Leveling courses may be constructed to insure that the frame meets the proposed grade at the design gradient, to a maximum of twelve inches (12"). A maximum two inch (2") thick layer of mortar may also be used to adjust the top slab. The cost of the welded wire fabric and bar reinforcement shall be included in the price bid for manhole(s) and catch basins.

2. All catch basins shall be CONNECTICUT STATE HIGHWAY DEPARTMENT STANDARD TYPE "C" concrete curbed unless otherwise specified. Any catch basins in town roads shall be TYPE "C" for bituminous curbed inlets unless otherwise specified. All basin frames and grates shall be galvanized as per current ConnDot requirements.

3. All proposed catch basins shall have a minimum of three foot (3') sumps below the invert of the outlet pipe to trap silt and sand from roads or parking areas, except as otherwise specified on the drawings.

4. Manholes shall have concrete aprons and inverts constructed to one-half the diameter of the outlet pipe with aprons sloped to drain.

5. Manhole steps will be required in all manholes deeper than four feet (4'). Spacing will be twelve inches (12") center to center with the top rung within a minimum of two feet (2') to the top of frame and cover and lower rung within eighteen inches (18") of the apron. The steps shall be ALCOA #6005-T5, drop front design, or a copolymer polypropylene conforming to ASTM 2146, type II, grade 43758 with a grade 60, half inch (1/2") steel rod or an approved equal.

6. Provide a minimum of six inches (6") of gravel bedding under all catch basins, manholes and outlet structures in earth and twelve inches (12") for rock excavations.

7. Knockout panels, stubs and/or manhole drops and accommodating invert channels shall be constructed to meet line and grade of future construction, as required. Main line and lateral future connections shall be suitably capped or plugged for water tightness. Contractor to provide a 1/2 inch metal rod with a two inch square plate top placed four inches below grade at the end of all capped utilities.

8. The contractor may elect to interchange rectangular manholes for circular manholes with the engineer's approval. The size substituted thereof shall be determined by the engineer. The cost of the new structure shall be the same cost bid per vertical lineal foot as the original structure. Shop drawings shall be submitted to the engineer for review.

9. Storm MH, Frames and grates shall be per detail 337 entitled "Schedule for Covers in Easements, Roads and Shallow Manholes". Sanitary manhole frame and grates shall be per local WPCA standards.

10. All head walls shall be Wing Type Endwalls as detailed by The Connecticut D.O.T. Standard Specifications and drawings, and as manufactured by Connecticut Precast Corp. Monroe CT or approved equal.

11. Non-shrink grout shall satisfy ASTM C109, C877 and CRD-C621- metallic aggregate, free of horizontal and vertical shrinkage.

B. STORM SEWER PIPES:

1. All R.C.P. Storm Sewer Drainage Pipe specified shall be Reinforced Concrete Pipe ASTM C76. Joints shall be rubber compression gasketted STM C443. Classifications shall be, CLASS IV in streets and CLASS III in unimproved areas, except fifteen inch (15") catch basin laterals shall be CLASS V, or approved equal.

2. All C.P.P. specified (3"-60") shall be 'N-12' smooth wall interior Corrugated High Density Polyethylene Pipe as manufactured by Advanced Drainage Systems (ADS), Inc., or approved equal. Reference is made to Product Note 3.115 as prepared by ADS for manufactures installation recommendations. The pipe shall meet or exceed the requirements as follows:

   a. AASHTO M 252 = Standard specifications for corrugated polyethylene drainage tubing 3"-10" dia.
   b. AASHTO M 294 = Standard specifications for corrugated polyethylene pipe 12"-48" dia.
   c. AASHTO MP 7-97 = Standard specifications for corrugated polyethylene pipe 54" and 60" dia.
   d. AASHTO Section 30 = Construction standards, Thermoplastic pipe.
   e. AASHTO D 2321 = Standard practice for underground installation of Thermoplastic pipe for sewers and other gravity flow applications.
   f. ASTM D 3212 = Standard specification for joints for drain and sewer plastic pipe using flexible elastomeric joints.
   g. ASTM F 1417 = Standard test method for installation acceptance of plastic gravity sewer lines using low-pressure air.
   h. ASTM F 477 = Elastomeric seals (gaskets) for joining plastic pipe.
   i. ASTM F 677 = Standard specification for large diameter corrugated polyethylene pipe and fittings.

3. All 'Tight Pipe' specified shall be 'N-12 WT IB' smooth wall interior Corrugated High Density Polyethylene Pipe with a ceramic composite joint as manufactured by ADS, or approved equal. The joints shall have a bell and spigot or bell-bell design and incorporate an ASTM F 477 elastomeric rubber gasket. The joints shall meet or exceed the requirements of ASTM 3212 lab pressure test of 10.8 psi, and ASTM 1417 watertight field test. After the pipe is installed it shall be air tested in conformance with ASTM F 1417.

4. All curtain and footing drain pipe shall be 4",6" or 8" (as specified on the drawings) perforated polyvinyl chloride plastic pipe (PVC) conforming to ASTM D 1785 with couplings and elbows shall conform to the requirements of ASTM D 2466 or D 2467. Class "1" heavy duty type, minimum slots ¼" clear opening, except as otherwise shown on the plans. Pipe shall exit to a gravel lined drainage swale or drainage structure. All aggregate for underdrain shall be washed as specified.

5. Pipe lengths for the storm drainage system are measured from centerline of structure to centerline of structure with the exception of flared ends which are measured from the outer most edge.

6. All piping shall be founded on a stone bedding in CLASS "B" and "C" trench installations for either earth or rock excavations, unless otherwise directed by the engineer. Refer to details.

7. All pipe backfill shall be placed in compacted twelve inch (12") max. lifts to an AASHTO T-99 density of 95% to proposed subgrade.

8. Pipes shall be cut flush to the inside walls of all structures. Openings at knockouts shall be mortared tight with a non-shrink grout. Concrete inverts and aprons shall be constructed to one-half the diameter of the existing pipe within manholes. Aprons shall slope to drain. Smaller pipe sizes entering structures shall, at a minimum, match the crown of the outgoing pipe, except as otherwise specified for critical elevations for upstream structures or in the case of significant grade changes.

9.. All footing drain discharge piping located in excess of twenty five (25) feet from any sewage disposal system shall be constructed of solid pipe. Any footing drain discharge piping located within twenty five (25) of any sewage disposal system shall be tight pipe and conform to the standards of Table 2-C of the State of CT Health code.

10. All roof drains shall discharge to collector pipe, to be conveyed to recharger basins. Size as shown on plans.

C. SANITARY SEWER PIPES:

1. Sanitary collector sewers, unless labeled differently on the design drawings, shall be eight inch diameter SDR-35 P.V.C. pipe, conforming to ASTM D3034, latest revised edition, laid at such depth below finished grade so as to provide adequate sewage facilities from first floor elevations.

2. Sanitary collector sewers with cover deeper than 15' shall be DR18, class 150 P.V.C. pipe, bell and spigot end push-on joints conforming to AWWA C900 standards, latest revised edition.

3. Sanitary collector sewers crossing inland wetland areas and streams shall be Class 52, cement lined ductile cast iron with push-on joints (unless otherwise noted), conforming to ANSI A21.51, latest revised edition, for the full distance from manhole to manhole. See drawings for sizes.

4. All sanitary sewer service piping shall be six (6) inch cast iron pipe, ductile iron pipe, or schedule 40 PVC pipe, for a five foot minimum distance from the foundation wall. Pipe shall be laid at a minimum grade of 1/4 inch per foot. Contractor to concrete encase pipe from foundation wall to suitable soil bearing area when backfill around house has not been fully compacted. From 5' outside of the building to the sanitary sewer collection main, the pipe shall be six (6") inch SDR-35 P.V.C. pipe, or approved equal. Connection between the pipes shall be by integral rubber compression gasket conforming to ASTM D312, as furnished by Fernco (style to be determined by type of pipe materials installed), or approved equal.

5. Pipe joints to be Neoprene ribbed gasket meeting ASTM F-477.

6. Pipe lengths for the sanitary sewer system are measured from centerline of structure to centerline of structure.

7. All piping shall be founded on a 3/4 inch crushed stone bedding as either CLASS "B" or "C" trench installations for either earth or rock excavations, unless otherwise directed by the engineer. Refer to details, Sheet C-14C.

8. All pipe backfill shall be placed in compacted twelve inch (12") loose lifts to an AASHTO T-99 density of 95% to proposed subgrade.

9. Pipes shall be cut flush to the inside walls of all structures. Openings at knockouts shall be mortared tight with a non-shrink grout. Brick and concrete inverts and aprons shall be constructed to one-half the diameter of the effluent pipe within manholes. Aprons shall slope to drain.

10. Air testing of all sanitary sewer piping shall be performed in accordance with the State health code's recommended testing procedures for sanitary sewer pipe. The test shall result in an infiltration loss rate of no more than 25 GPD/inch-DIAMETER/mile. Reference is made to sanitary pipe test requirements for further details.

11. All sanitary sewer construction shall be inspected by the design engineer, or a representative of the Municipality's WPCA, as determined necessary. A 72-hour advance notice required. Do Not backfill lines until inspections are completed.

12. All sanitary sewer construction shall be in accordance with the Municipality's WPCA standards and practices and as specified in NEIWPCC TR-16 Guidelines, whichever is the stricter. Contractors are to be familiar with same before initiating work. Significant changes to the sanitary sewer system design shall require WPCA prior approval.

13. Groundwater anti-seep collars shall be installed at locations shown on the plans and where ordered by the Engineer. Anti-seep collars shall be "Ripley Dams" as manufactured by McRip Manufacturing, Durham, MA, phone (603) 868-5176, e-mail info@trenchdam.com or approved equal. Average size is 3' high x 40" wide. Made of ABS plastic.

D. SANITARY SEWER GRAVITY PIPE AIR TESTING:

All sanitary sewer gravity pipe shall be air tested to demonstrate an infiltration loss rate of no more than 25 GPD/inch-DIAMETER/mile. The following procedure shall be considered acceptable.

1. Test is to be conducted between two consecutive manholes. Where a building connection is involved, the connection shall be plugged within five feet of the building.

2. The test section of the sewer line is plugged at each end. One of the plugs used at the manhole must be tapped and equipped for the air inlet connection for filling the line from the air compressor.

3. All service laterals, stubs and fittings into the sewer test section should be properly capped or plugged and carefully braced against the internal pressure to prevent air leakage by slippage and blowouts.

4. Connect air hole to tapped plug selected for the air inlet. Then connect the other end of the air hose to the portable air control equipment which consists of valves and pressure gauges used to control:

   a. The air entry rate to the sewer test section; and

   b. To monitor the air pressure in the pipe line more specifically, the air control equipment includes a shut-off valve, pressure regulating valve, and a monitoring pressure gate having a pressure range from 0 to 5 psi. The gauge shall have minimum divisions of 0.10 psi and an accuracy of +/- 0.04 psi.

5. Connect another air hose between he air compressor (or other source of compressed air) and the air control equipment.

6. Supply air to the test section slowly, filling the pipe line until a constant pressure of 3.5 psi is maintained. The air pressure must be regulated to prevent the pressure inside the pipe from exceeding 5.0 psi.

7. When constant pressure of 3.5 psi is reached, throttle the air supply to maintain the internal pressure above 3.0 psi for at least 5 minutes. This time permits the temperature of the entering air to equalize with the temperature of the pipe wall. During this stabilization period, check all capped and plugged fittings with a soap solution to detect any leakage at these connections. If leakage is detected at any cap or plug, release the pressure in the line and tighten all leaky caps and plugs. Then start the test operation again by supplying air. When it is necessary to bleed off the air to tighten or repair a faulty plug, a new five minute interval must be allowed after the pipe line has been refilled.

8. After the stabilization period, adjust the air pressure to 3.5 psi and shut off or disconnect the air supply. Observe the gauge until the air pressure reaches 3.0 psi. At 3.0 psi. commence timing with a stop watch which is allowed to run until the line pressure drops to 2.5 psi at which time the stop watch is stopped. The time required, as shown on the stop watch, for a pressure loss of 0.5 psi is used to compute the air loss.

9. If the time, in minutes and seconds, for the air pressure to drop from 3.0 to 2.5 psi is greater than that shown on the schedule below for the designated pipe size, the section undergoing test shall have passed and shall be presumed to be free of defects. The test may be discontinued at that time.

10. If the time, in minutes and seconds, for the 0.5 psi drop is less than that shown in the schedule for the designated pipe size, the section of pipe shall not have passed the test; therefore, adequate repairs must be made and the line retested.

11. For eight inch and smaller pipe, only: if, during the five minute saturation period, pressure drops less than 0.5 psi after the initial pressurization and air is not added, the pipe section undergoing tests shall have passed.

12. Multi Pipe Sizes: When the sewer line undergoing test is eight inches or larger diameter pipe and includes four inch or six inch laterals, the figures in Table 3 for uniform sewer main sizes will not give reliable or accurate criteria for the test. Where multi-pipe sizes are to undergo the air test, compute the "average" size in inches which is then multiplied by 38.2 seconds. The results will give the minimum time in seconds acceptable for a pressure drop of 0.5 psi for the "averaged" diameter of pipe.

SCHEDULE OF TIME REQUIREMENTS FOR AIR TESTING

PIPE SIZE (IN INCHES)	TIME MIN.	SEC.
4	2	32
6	3	50
8	5	6
10	6	22
12	7	39
14	8	56
15	9	35
16	10	12
18	11	34
20	12	45
21	13	30

NOTE: For larger diameter pipe use the following:
Minimum time in seconds = 462 x pipe diameter in feet

13. All tests must be witnessed by the Design Engineer or representative of the local WPCA.

E. WATER MAINS:

1. All water main installations shall be installed in accordance with the standard specifications of local water company. The minimum cover over the pipe shall be four feet, six inches (4'6"). The pipe shall be eight inch class 52 cement lined ductile iron unless otherwise specified on the drawings or ordered by the Water Company. ALL dead ends shall terminate with a hydrant or approved blow off for flushing purposes and shall be capped.

2. All subgrade and backfill materials to be approved by water company prior to placing of facilities.

3. Hydrants and valve assemblies to be standard materials used by the water company.

4. Proposed water mains and service lines shall be disinfected in accordance with the A.W.W.A. standards C601, latest revised edition and as may be amended by the water company.

5. Acceptable results of bacteriological analysis from water samples collected from the new distribution main after disinfection and before use of the mains, shall be submitted to the engineer and water company.

6. Water mains to maintain a ten foot (10') minimum horizontal separation or an eighteen inch (18") minimum vertical separation over sanitary sewers or storm drains. Where neither separation can be maintained, either the sanitary sewer pipe shall be placed in a collar to a minimum ten feet (10') horizontal distance from the waterline, or a concrete encasement or cradle shall be constructed. Refer to details for type.

7. Thrust blocks to be installed at all plugs, tees and bends greater than or equal to 11.25 degrees. Refer to detail.

8. Water service lines to be one inch (1") "K" copper tubing, unless otherwise specified by the water company.

9. Restrained joints shall be 3/4" threaded rods or lugged retainer glands, placed a minimum of two pipe lengths at T's, crosses, and pipe ends ends or as ordered by the local water company inspector.

E. GENERAL NOTES:

1. All work associated with gas, telephone, data, cable TV and electric power including primary conduit, secondary conduits and vaults and any other underground conduits or appurtenances are included as part of the Site Work, whether this Work is shown on the drawings or not. Contractor to provide a fully operable project. The Contractor shall have performed due diligence and investigation with the responsible local utility companies associated with the aforementioned items and has familiarized themselves with all requirements for the furnishing and installing of these utilities in accordance with the utility companies and all authorities having jurisdiction and has included all those costs in their contract price and this Agreement. Contractor is not responsible for service connection fees.

2. Contractor shall provide traffic control as required by the Town and CTDOT that may include plans, traffic control officers, flag person, traffic signs, lighting and delineators as necessary to ensure the safe movement of Contractor's and Subcontractor's equipment into and out of the Site.

3. Contractor is responsible to minimize dust migration resulting from his operations including cutting, blowing, hammering, trucking, digging, drilling, etc., and must comply to keep construction debris and dust within the project limits in accordance with the local and state codes.

4. Onsite parking may or may not be available. Contractor shall be responsible for providing parking for the workers and equipment for the project. Owner shall take no responsibility for damage or loss to any vehicles parked in any locations regardless of their use for this Project. Contractor shall insure only authorized project vehicles and / or delivery vehicles have access. Contractor will be responsible for making sure any truck leaving the Site does not track dirt onto the streets. If Contractor's or subcontractor's trucks or delivery vehicles track dirt onto the street, Contractor will be responsible for cleaning the street by hand or street sweeper as necessary. If Contractor refuses to clean the street in a timely manner, Owner shall provide any necessary street cleaning services at Contractor's cost.

5. All site monument signs and permanent building signage are the responsibility of the CONTRACTOR. Contractor shall obtain permits required for the installation. Monument sign(s) shall be installed after fine grade to prevent damage to sign(s), so that the maximum amount of time exposure can be obtained from the sign for marketing purposes. All monuments signs to have lighting on both sides of the sign. Signage, permits, scheduling and documentation shall be coordinated with Owner.

6. Paving shall be installed in two lifts. The first lift may be placed at any time during construction to help facility site access. The second lift shall be placed four to six weeks prior to the substantial completion of the building. (Weather/season permitting) cutting and or patching of second lift pavement will not be accepted and grounds for removal and replacement of the entire surface of paving.

7. Provide trenching, backfilling and reconditioning of trench for gas, water, CATV and other utility services from the property line to the meter or point of connection into the building for the mechanical/utility closet. Exception is where the gas and Water Company are under separate contract with the Owner to complete specific portions of the work by their forces.

8. Work includes demolition and disposal of all and any existing materials on site. The Contractor acknowledges that they have visited the site and are responsible for all existing items on site that require removal and disposal for the proper building of this project.

9. Contractor shall provide all layout of lines and grade in accordance with the drawings.

NOTE:
1. THE CONTRACTOR SHALL NOTIFY "CALL BEFORE YOU DIG" AT LEAST 72 HOURS PRIOR TO THE START OF EXCAVATION, BY CALLING 1-800-922-4455.

REVISION				
NO.	DATE	DESCRIPTION	DRAWN BY	CHECKED BY

COPYRIGHT © 2020: THESE PLANS ARE THE PROPERTY OF DYMAR, PREPARED AS AN INSTRUMENT OF SERVICE FOR PERMITTING AND CONSTRUCTION OF THE PROJECT DESCRIBED HEREIN. THE CONTRACT FOR THE PROJECT, DYMAR DOES NOT GUARANTEE THESE PLANS TO REFLECT THE TRUE CONDITIONS. THE CONTRACTOR SHALL VERIFY ALL FIELD CONDITIONS AND DIMENSIONS AND IS RESPONSIBLE FOR NOTIFYING DYMAR IF A DISCREPANCY EXISTS. THESE LETTER DYMAR SHALL HAVE FINAL SAY.

DYMAR
800 Main Street South · Southbury, CT. 06488 · (203) 267-1046 · Fax (203) 267-1547
ENGINEERING · PLANNING · SURVEYING · DEVELOPMENT SERVICES

DRAWINGS TO BE USED FOR LAND USE SUBMISSIONS ONLY
NOT FOR CONSTRUCTION

CLIENT: Estate of Dina M. & James S. Belta
128 Bayberry Lane
Westport, Connecticut 06880

PROJECT: Open Space Residential Subdivision
128 Bayberry Lane
Westport, Connecticut 06880

TITLE: Construction Specifications & Standards

NOT VALID WITHOUT SIGNATURE AND ORIGINAL SEAL

MARK E. LANCOR, P.E. #12369

DATE:	05/14/2020
SCALE:	N.T.S.
DESIGNED BY:	M.E.L.
DRAWN BY:	C.B.B.
CHECKED BY:	M.E.L.
JOB NO:	00934
DRAWING NO:	C-9A

F:\00934 - Bayberry Lane-Westport\Civil\Dwg\090A.dwg, 9A, 5/13/2020 12:22:45 PM, gemus, AutoCAD PDF (Web and Mobile).pc3, ARCH full bleed D (24.00 x 36.00 Inches), 1:1

EARTH WORK SPECIFICATIONS

PART 1 GENERAL

1.1 WORK INCLUDED

A. Layout limits of all construction and stake all lines and levels.

B. Strip and remove topsoil and stockpile for later use. Remove excess from site.

C. Earthwork and trench excavation, preparation of sub-grade for foundations, utilities, pavements, and drainage systems. Excavate subsoil and stockpile for later reuse. Remove excess from site. Sheeting and bracing to support excavations, as required.

D. Formation of sub-base with select fill under structures, utilities, piping, and pavements.

E. Below grade excavation and refill when unsuitable materials are encountered.

F. Backfilling of trenches for utilities.

G. Compaction Control.

H. Use of explosives to assist rock removal.

I. Testing of earth foundations.

J. Grade and rough contour site. Finish grade subsoil, proof roll site, and place, level and compact topsoil.

K. All construction operations are to include ground water control, stormwater control, furnishing additional fill as required, compaction and/or off-site disposal of spoil.

L. Protection of existing buildings, pavements and utilities to remain.

M. Submittals.

1.2 QUALITY ASSURANCE

A. Testing and Inspection Services:

1) Employ at Contractor's expense, a state certified testing laboratory to perform soil testing inspection and lab services, and related work for quality control testing during earthwork operations.

2) Tests and analysis of fill materials will be performed in accordance with ANSI/ASTM D698, Method "C", and ASTM D2922, Method "B".

B. Protection:

1) Use all means necessary to protect property, adjacent utilities, and the proposed facilities and materials considered herein, before, during, and after installation. Any damages incurred by the Contractor shall be repaired or replaced, as ordered by the Owner or its designated representative, and at the Contractor's expense. Wherever Owner is referenced, it shall also mean its designated representative.

2) In the event of damages, immediately notify the Owner.

1.3 STANDARDS

A. ANSI/ASTM C136 - Sieve Analysis of Fine and Coarse Aggregates.

B. ANSI/ASTM D698 - Moisture Density Relations of Soils and Soil Aggregate Mixture Using 5.5lb (2.49 kg) hammer and twelve inch (305 mm) Drop.

C. ANSI/ASTM D1556 - Density of Soil in Place by the Sand Cone Method.

D. ANSI/ASTM D1557 - Moisture Density Relations of Soils and Soil Aggregate Mixture Using ten lb. (4.54 kg) hammer and eighteen inch (457 mm) Drop.

1.4 SUBMITTALS

A. As Built Drawings: Contractor shall maintain "Red Line" drawings, recording the completion of the work, noting all deviations from the contract requirements, in particular underground utilities and pertinent notations. Contractor to maintain a daily photo log in the progression of work, provided as documentation of compliance for the layout of work, in particular to record and maintain the installed locations and elevations of all underground utilities. When the Contractor utilizes GPS, the Contractor shall maintain a record point file for installed underground utilities, the limits of rock excavations and structure excavations, including the location and elevations of the subgrade for the placement of select fill materials. All records are to be turned over to the Owner's retained state licensed land surveyor for the purpose of completing a record as-built at the Owner's expense, and as required before final acceptance and contract close out by the Owner.

B. Test Reports:

1) As directed by the Owner or their representative, submit three copies of the following directly to the Engineer from an approved testing laboratory for approval:

a. Test reports on borrow, select fill and refill materials.

b. Controlled field density test reports.

c. Gradation and moisture-density characteristics for all granular, sand, and select fill materials.

C. Samples: Submit 40-50 Lb. sample of each type of fill, sand filter and granular material to testing laboratory, in airtight containers. Submit a 5-10 Lb. sample to Owner's representative of tested materials. The Contractor is to maintain on-site a minimum of 30 Lbs. of the tested material, in closed containers, properly labeled with the type, source, and date the material was sampled.

1.5 LAWS AND REGULATIONS

A. All work under this contract shall be accomplished in accordance with regulation of the local, county, state, and federal agencies and national or utility company standards as they apply. Where laws and regulations of public authority prescribe higher degree of protection than specified herein, then the higher degree so prescribed shall govern.

1.6 JOB CONDITIONS

A. Subsurface Data: Any bidders deeming it necessary to satisfy themselves of the existing ground conditions, should do so at their expense. Bidders are expected to examine the site and solicit any historical information from previous construction activities from the Owner, Engineer or Construction Manager, and then decide for themselves as to the character of materials to be encountered.

B. No warranty, either expressed or implied, is made as to the accuracy of the subsurface information as it relates to the specific location of the work.

C. Variations in existing ground conditions differing from those indicated on the drawings and subsurface logs shall not, under any conditions, constitute grounds for changes in contract price or completion dates of this Contract.

D. Upon notification, and as approved by the Owner and those having jurisdiction, the bidders will be allowed the right to make any subsurface explorations they deem necessary to satisfy themselves of the existing ground conditions at their own expense. Additional Test borings and other exploratory operations made by the Contractor after award shall be at no additional cost to the Owner.

E. Existing Utilities:

1) Contractor to place Call-Before-U-Dig prior to starting work and locate existing underground utilities in areas of work by test pit for uncharted areas at contractors expense.

2) If utilities are to remain in place, provide adequate means of protection during earthwork operations. The Contractor will be responsible for all matters dealing with safety in the preservation, maintenance of any and all utilities, and the safety of all persons and property during the performance of work, including their own employees and all employees of other subcontractors to the project.

3) Should uncharted, or incorrectly charted, piping or other utilities be encountered during excavation, consult utility owner immediately for directions. Cooperate with Owner and utility companies in keeping respective services and facilities in operation, if required. Repair damaged utilities to satisfaction of utility owner at no additional cost to the Owner.

1) Do not interrupt existing utilities serving facilities occupied and used by Owner or others, except when permitted in writing by the Owner and others, and then only after acceptable temporary utility services have been provided.

2) Demolish and completely remove from site existing underground utilities indicated to be removed, unless otherwise approved. Coordinate with utility companies for shutoff services if lines are active.

F. Dust Control:

1) The Contractor shall use all means necessary to control dust on and near the work and on and near all off-site borrow areas, if such dust is caused by the Contractor's operations during performance of the work or if resulting from the condition in which the Contractor leaves the site. Method of dust control shall be approved by the Owner.

2) Thoroughly moisten all surfaces as required to prevent dust being a nuisance to the public neighbors, and concurrent performance of other work on the site.

G. Protection:

1) Barricade open excavations occurring as part of this work and post with warning lights. Operate warning lights as recommended by authorities having jurisdiction.

2) Provide the necessary safeguards to prevent accidents, to avoid all unnecessary hazards and protect the public, the work and the property at all times, including Saturdays, Sundays and holidays.

3) Be responsible for any and all damages which may arise or occur to any party whatsoever by reason of the neglect in providing proper lights, guards, barriers, or any other safeguards to prevent damage to property, life and limb.

4) Protect structures, utilities, sidewalks, pavements, and other facilities from damage caused by settlement, lateral movement, undermining, washout and other hazards created by earthwork operations.

1.7 EXCAVATION CLASSIFICATIONS

A. Earth Excavation:

1) Earth excavation shall include the excavation, removal and satisfactory disposal of all materials of whatever nature encountered from within the limits indicated, specified or as directed in writing that are not classified as rock or unauthorized excavation.

2) It shall include, but not necessarily limited to, earth materials such as peats, organic or inorganic silts, clay, sand and gravel; pavement; cobbles and boulders less than one cubic yard in volume; soft or disintegrated rock which, in the opinion of the Owner, can be removed with the Contractor's excavation equipment not specifically included in other classifications.

3) The removal of underground obstructions such as pipe lines, manholes, tanks etc., to be abandoned, and foundations, foundation walls or other existing structures which are not considered rock excavation, shall be paid for as earth excavation.

4) The shaping of slopes during excavations to retain soil repose, including maintenance of sides and slopes of excavations until completion of backfilling.

5) The stockpiling of excavation materials classified as suitable material where directed, until required for fill. Placement, grading and shaping of stockpiles for proper drainage as approved by the Owner's representative.

B. Rock Excavation:

1) Trench rock shall be all rock excavation required for the installation of pipes, foundations and structures below grade.

2) Any rock material shall be considered rock excavation, which in the opinion of the Owner, cannot be excavated except by drilling, wedging, chipping, and/or blasting. No soft or disintegrated rock which can be removed with the Contractor's excavation equipment (backhoe, etc.), a pick or any material which can be broken down by sledge hammers, nor ledge or boulders nor loose, shaken or previously blasted rock, nor broken stone in rock filling or elsewhere, will be classified as rock.

3) When a question arises as to whether material encountered is to be considered rock, the Owner shall have the right to instruct the Contractor to make a vigorous effort to remove it with his excavation machinery. If in the Owner's opinion it cannot reasonably be removed by the machine, the Contractor will then proceed as specified herein.

4) Solid rock, boulders, and concrete or brick foundations greater than one cubic yard, in the opinion of the Owner, requiring drilling, wedging, chipping, or blasting shall be considered as Rock Excavation. Boulders and concrete or brick that can be removed by a power shovel prior to drilling and blasting shall be considered as Earth Excavation.

5) Intermittent drilling or ripping performed to increase production will be classified as Earth Excavation.

C. Below Grade Excavation:

1) Below grade excavation shall include the excavation and removal of all foundation materials below the limits of excavation sub-grades which, because of their character, are considered unsuitable and unsatisfactory materials for providing suitable bearing capacity to receive the work included under this contract.

2) Below grade excavation shall be paid for as Earth Excavation at the levels in which the work is being performed and as approved by the Owner.

D. Unauthorized Excavation: consists of removal of materials beyond indicated sub-grade elevations or dimensions without specific direction from the Owner. Unauthorized excavation and refill, as well as remedial work directed by the Owner, shall be at the Contractor's expense.

E. Structure Excavation:

1) Structure excavation shall include the excavation for building and construction areas involving below grade foundation units, pre-cast and cast-in-place tanks and vaults, abutments, and retaining wall systems not considered as trench site excavations. The excavation shall conform to the elevations and dimensions shown within a tolerance of plus or minus 0.10 foot and extending a sufficient distance from footings and foundations to permit the placement and removal of concrete for work, installation of services other construction and for inspection.

2) Structure excavation shall not be classified for payment, but considered as Earth and/or Rock Excavation as it applies to the excavation work encountered.

F. Pavement Excavation:

1) This shall be considered as the cut surface under pavements to comply with cross sections, profiles, elevations and grades as shown on the drawings or ordered by the Engineer.

2) Pavement excavation shall not be classified for payment but considered as Earth and/or Rock Excavation as it applies to the excavation work encountered.

1.8 SUB-GRADES

A. Buried Utilities and Structures: Defined as that plane which is coincident with the bottom of the bedding layer beneath the utility, sewer manholes, footings or slabs within the limits as described elsewhere, and as shown on the drawings.

B. Paving Area:

1) The paving area sub-grade is defined as that plane which is coincident with the bottom of:

a. The rolled gravel sub-base for roads, access drives, and parking areas; and

b. The rolled gravel base for bituminous concrete and concrete walkways described within the construction drawings.

PART 2 PRODUCTS

2.1 COMMON FILL MATERIALS

A. Subsoil: Reused; Imported; free of stones larger than twelve inch size, debris, and unsuitable materials.

B. Select Backfill: Free of stones larger than two inch size, debris, clogs of clay and, unsuitable material having no more than 70 percent passing a No. 40 sieve and no more than 20 percent finer by weight passing a No. 200 sieve.

C. Free Draining Material: Free of stones larger than two inch size, debris, clogs of clay and, unsuitable material consisting of sands, gravel and rock fragments having no more than 70 percent passing a No. 40 sieve and no more than ten percent finer by weight passing a No. 200 sieve.

2.2 SELECT FILL MATERIALS

A. Type A - Coarse Stone: Gravel, Pit Run, Angular, Crushed, natural stone; free of shale, clay friable materials and debris; graded in accordance with ANSI/ASTM C136 within the following limits: Sieve Size/ Percent Passing - 2 inches/100, 1 inch/90-100, 3/4 inch/15-25, #40/0-10 and #100/0-5. Where "washed" coarse stone or gravel is called for on the plans, the material shall be in accordance with Type "A" fill with no material passing No. 40 sieve and less than ten percent passing a one-half inch sieve.

B. Type B - Pea Gravel: Screened natural stone; sub-rounded, washed, free of clay, shale, organic matter graded in accordance with ANSI/ASTM C136 as follows: Sieve Size/ Percent Passing - 1/2 inch/100, 3/8 inch/85-100, #4/5-30 and #8/0-10.

C. Type C - Bank Run Gravel: Shall consist of sound, tough durable particles of crushed or uncrushed gravel meeting the following gradation to be used primarily for refill and pavement sub-base; graded in accordance with ANSI/ASTM C136, within the following limits: Sieve Size/ Percent Passing - 3-1/2 inches/100, 1-1/2 inches/55-100, 1/4 inch/25-60, #10/15-45, #40/5-25 and #100/0-10 and #200/0-5.

D. Type D - Processed Gravel: Shall consist of sound, tough durable particles of crushed or uncrushed gravel primarily used as an aggregate subbase for pavements, graded in accordance with ANSI/ASTM C136 and Standard Specification, Section M.05.01 conforming to the following limits: D1 3/4 Process Sieve Size/ Percent Passing - 2 inches/100, 3/4 inch/50-75, 1/4 inch/25-45, #40/5-20 and #100/2-12. Section M.05.01 conforming to the following limits: D1 1-1/4 Process Sieve Size/ Percent Passing - 2-1/2 inches/100, 2 inches/95-100, 3/4 inch/50-75, 1/4 inch/25-45, #40/5-20 and #100/2-12.

E. Type E - Sand: Clear medium to fine natural river or bank sand; free of silt clay, loam friable or soluble materials, and organic matter; graded in accordance with ANSI/ASTM C136 within the following limits: Sieve Size/ Percent Passing - 3/8 inch/95-100, #4 /80-100, #50/10-30, #100/0-10 and #200/0-3.

F. Type F - Riprap: Shall consist of sound, tough, durable and angular rock, free from decomposed stones or other defects impairing its durability. Broken concrete or rounded stones shall not be permitted. The type of material shall conform to Section M12.02 of the Standard Specification. The type shall be as noted on the plans specified as "*standard*", "*intermediate*", or "*modified*".

G. Type G - Trap-rock: Shall consist of sound, tough, durable and angular crushed or broken stone conforming to the following gradation: Sieve Size/ Percent Passing - 2-1/2 inches/100, 2 inches/95-100, 1-1/2 inches/35-70, 1-1/4 inches/0-25, 1 inch/0-10.

2.3 ACCESSORIES

A. Marker Tape: ITT Blackburn, Type YT6 imprinted with "Buried Electric Line Below".

B. Geotextile Woven Filter Fabric: Mirafi 500x Soil Stabilization Fabric or Approved Equal.

2.4 LABORATORY TESTS

A. Cost for sampling, transporting and making all laboratory test required to obtain characteristics of materials to be used under this Section, including gradation tests and determination of moisture-density relationships, shall be borne by the Contractor.

B. If tests indicate work does not meet specified requirements, remove work, replace and retest at no cost to Owner.

PART 3 EXECUTION

3.1 LIMITS OF EXCAVATION

A. Excavation shall be made only to such lines and grades as are shown upon the drawings, described herein, or as may be directed by the Owner. No allowances for additional payment will be made for excavation beyond or below these limits, unless otherwise ordered by the Owner in writing. All materials from slides or cave-ins shall be removed and disposed of at the Contractor's expense.

B. If material is removed below or beyond the limits finally prescribed for by any excavation, it shall be replaced at the Contractor's expense with suitable fill and/or fill and refill materials, as directed and approved by the Owner. Lean concrete fill may be used to bring elevations to proper sub-grade under footings, foundation bases, or retaining walls, when deemed acceptable by the Owner.

C. Limits of excavation for structures and footings shall be to the limits prescribed on the drawings measured from the outside of the outer walls and footings and made as nearly vertical as possible except as otherwise directed and/or approved by the Owner. Maximum slope for bottom of footings or between bottoms of adjacent footings to be one vertical to two horizontal.

D. The trenches for pipes shall not be less than six inches wider in the clear, on each side, measured over the limbs of the pipe, and the total width of the trench measured at the top of the pipe shall not exceed the external diameter of the pipe by more than twelve inches on either side unless directed otherwise.

E. Where the Contractor elects to use a steel trenching box, as approved by the Owner, in lieu of sheeting and shoring, as required, no allowance will be made for additional payment for its use.

F. Excavations in close proximity to the drip-line of large trees to remain (> twelve inches at 4.5 feet) shall be excavated by hand. The Contractor shall protect the root system from damage and dry out to the greatest extent possible. Maintain moist condition for root system and cover exposed roots with burlap. Paint root cuts of one inch diameter and larger with emulsified asphalt tree paint.

3.2 STRIPPING, STOCKPILING AND REPLACING TOPSOIL

A. Stripping (Removal) of Topsoil:

1) Topsoil shall be carefully removed to the depths and within the limits indicated or directed for removal and replacing of topsoil.

2) Topsoil shall be transported and deposited in storage piles in approved locations convenient to the areas from which it is removed. The topsoil shall be stockpiled separately from other excavated materials and free of roots, stones and other undesirable material.

3) The Contractor shall take all necessary precautions to prevent other excavated materials or objectionable materials from becoming intermixed with topsoil during any operations.

Stripping operations shall be completed prior to excavation, filling, compacting or grading operations.

3.3 EXCAVATION

A. General:

1) The Contractor shall perform all site excavation, fill and backfill and compaction as required for the various utilities, structures, conduits, embankments, road and appurtenances, thereto, and for all site or miscellaneous grading.

2) All excavations shall be described in accordance with the classifications defined elsewhere herein.

B. Site and Underground Utility Excavation:

1) Excavate subsoil required for finished grades and utility systems.

2) All excavation for pipes, manholes, tanks, and underground utility structures shall be made by either open trenches or vertically sheeted trenches. All excavations over 5'0" depth shall be performed in vertically sheeted and shored trenches or in a steel trenching box, as permitted and approved by the Engineer.

3) Machine slope banks to angle of repose or less until shored.

4) Stockpile excavated material in area designated on site and remove from site excess subsoil, unsuitable and blasted materials not being reused.

5) Special care shall be used to protect existing trees to be saved in the proximity of the trench and site excavation. Where tree roots are exposed by the excavation, they shall be cleanly cut at once with a sharp knife or other approved pruning tool and any cuts over one inch in diameter shall be painted with an approved tree paint. Following any tree painting, soil shall be promptly backfilled over the root ends to a depth of at least four inches above the root.

6) Not more than 200 feet of any open trench can advance the end of the pipe, unless otherwise directed. The trench shall be excavated to its full depth for a minimum distance of twenty feet beyond the minimum length of pipe permitted to be laid in it. Written permission shall be required by the Contractor and submitted to the Engineer in order to waive these requirements.

7) Excavated material which cannot be stored along side of the trench safely to maintain traffic conditions shall be removed from the work area and stored at an approved stockpile area until backfilling can take place. Only material which is of satisfactory quality can be reused for backfilling.

8) No excessive trench widths will be allowed to avoid the use of sheeting. The trench width at and below a level one foot above the top of the pipe shall not exceed the limits indicated on the drawings for the size pipe being installed, unless otherwise permitted by the Engineer.

C. Structure Excavation:

1) The Contractor shall conduct his operation to conform a specified sequence of general and structure/excavation, as required for footings, slabs, pre-cast tanks and vaults and foundation units, backfill and completion of the sub-grade within areas classified as structure excavation.

2) The Contractor shall excavate and remove all materials above the sub-grade level and remove all unsuitable or excess materials. The resulting exposed surface in the excavated portion of the building area shall then be compacted prior to any other earthwork operation.

3) The Contractor shall excavate for all footings, foundation units and foundation walls, as hereinafter specified, after excavation to sub-grade and compaction. Trim bottoms to required lines and levels. Final levels shall be excavated by hand just prior to concrete placement.

4) The Contractor shall place and compact all backfill to sub-grade, in lifts hereinafter specified.

5) Excavation shall not interfere with a normal 45 degree bearing capacity bulb for any foundation.

6) During backfilling operations for foundation, pre-cast structures and retaining walls, care shall be exercised so that the use of compaction equipment does not damage the walls.

7) If suitable bearing capacity for foundations cannot be obtained at the depth indicated on the Drawings, or within the excavations required by these Specifications, the Contractor shall immediately notify the Owner and Engineer. The Contractor shall remove any remaining unsuitable material as directed. The Owner shall be the sole judge of the suitability of all materials. Placing of footings, foundation walls or compacted gravel on unsuitable material will not be permitted.

8) Rock Encountered: If rock is encountered at the required elevations, the rock shall be over-excavated to eighteen inches below bottom of foundations and replaced with a minimum of twelve inches of compacted Type D fill and six inches of Type A gravel to the sub-base elevation.

D. Cold Weather Protection: bottoms of excavations shall be protected from frost and water, whatever the source. Foundation units, pre-cast structures, footings, and slab-on-grade shall not be placed on frozen ground nor on saturated materials. No excavation shall be made to the full depth indicated when freezing temperatures may be expected, unless the footings or slabs can be poured immediately. The bottoms so excavated shall be protected from frost and water when temperatures are less than 35°F (1°C).

E. Rock Excavation:

1) Rock occurring within the lines indicated for excavation for pipe lines and structures shall be excavated to the lines indicated, unless otherwise directed in writing by the Owner. Unauthorized excavations of rock or excavations made beyond or below the indicated or directed limits, shall be refilled at no additional expense to the Owner.

2) Where boulders are exposed on the sides of or in the bottom of excavations, they shall be wholly or partially removed. Boulders shall be removed to not less than the lateral trench width payment lines indicated, not less than twelve inches outside structure walls and limits, to not less than twelve inches below the underside of pipes or structure foundation slabs. Depressions resulting from the removal of boulders shall be refilled with compacted fine gravel as specified herein. Fine gravel for refilling will not be paid for separately, but payment therefore shall be considered to be included for payment under the contract unit price bid for rock excavation.

3) The rock shall be excavated to provide sufficient room for the proper construction of foundations, below grade structures and the installation of pipe. The limits shall be as outlined herein or as detailed on the drawings.

4) Rock encountered within a road right-of-way shall be removed to a minimum of 12 inches below subgrade pavement section and refilled to sub-grade with Type "C" fill, or as approved by the Engineer and will be classified as open face mass rock excavation. Trench rock shall be measured from the road rock sub-grade pay limit for utilities required to be installed within this area.

5) Unless otherwise directed, rock shall be fully taken out at least 25 feet in advance of the laying of pipe. Rock shall be removed sufficiently at joints so they may be properly made. Rock shall be removed to a point twelve inches below the bottom of all flexible pipe and utility foundation structures unless otherwise indicated elsewhere on the drawings. Rock shall be removed to a point six inches below rigid pipe as indicated on the drawings. The twelve or six inch space shall be filled with a select (Type A) fill as specified elsewhere herein.

6) All excavated rock larger than 3/4 cubic foot, which is not crushed on site, shall be removed from the site under this item. Rock under or equal to 3/4 cubic foot may be placed along embankments, within fill areas or back into the trench, but shall be placed at least three feet away from pipes, footings or structures as approved by the Engineer.

7) Clean, select material, satisfactory to the Owner, shall be used for backfill to replace any removed trench or structure excavated rock and shall be furnished at no additional cost to the Owner.

3.4 BACKFILL AND FILL

A. Excavations shall not be backfilled or concrete placed for footings or slabs until all required tests and inspections have been satisfactorily performed. These include:

1) Acceptance of construction below finish grade including, where applicable, foundations, damp proofing, waterproofing, and perimeter insulation.

2) Inspection, testing, approval, and recording locations of underground utilities and foundations.

3) Removal and inspection of concrete formwork after concrete has attained its 28 day design strength.

4) Removal of trash and debris.

5) Permanent or temporary horizontal bracing, constructed in place for horizontally supported walls.

B. Each layer of backfill material shall be moistened and compacted in such manner as to permit the proper and desired compaction of the backfill, as so stated herein.

C. Backfill all excavations as soon as practicable with approved excavated material. If unsuitable material is encountered and suitable material is not available from the excavations in the quantities required for proper backfilling of excavations, provide the necessary approved earth borrow for backfilling form off-site sources.

D. Trench Areas:

1) All backfill placed in trenches at a level twelve inches above the top of pipe shall consist of SELECT BACKFILL, placed in layers not exceeding the placement limits specified herein. The SELECT BACKFILL shall be deposited uniformly on both sides of the pipe and shall thoroughly be compacted by tamping under and on each side of the pipe to provide uniform support around the pipe, free from voids.

2) The balance of backfill in trenches shall be compactable materials as approved by the Engineer, not frozen and without any stones larger than twelve inches in their greatest dimensions. It shall be spread in layers not exceeding twelve inches in loose state and each layer shall be compacted to the density requirements specified herein.

E. Structure Perimeters:

1) Backfilling against masonry or concrete work shall only be done after inspection of work and when approved by the Engineer. Symmetrical backfill, loading adjacent to structure shall be maintained. During backfilling and compacting operations, care shall be exercised so that equipment used will not overload the structures. Take care to prevent wedging action of backfill against structures by carrying material uniformly around structure near the same elevation at each lift.

2) Where earth is on one side of walls only, backfilling and compaction shall not start until floor slabs or adequate bracing is provided to laterally support top and bottom of walls.

F. Fill and Embankment Areas:

1) The Contractor is to provide earth fill as required, to the lines, grades and limits as shown or directed by the Engineer. The fill shall be from approved on-site sources or as earth borrow from approved off-site sources at no additional cost to the Owner except if provided for in the contract.

2) The Contractor shall maintain the filled surfaces in good condition with a smooth surface level with adjacent undisturbed surfaces. Any subsequent settling shall be immediately repaired and such maintenance shall be provided by the Contractor for the remainder of the Contract.

3) No rock fill or reclaimed waste containing fragments over twelve inches (12") in their greatest dimension shall be placed above an elevation two feet (2') below the top of the embankment or fragments over eight inches (8") within three feet (3') of finished road grade. No particle over five inches (5") shall be placed within twelve inches (12") of the top of the prepared sub-base.

4) Rock and reclaimed waste nests shall be prohibited. Rock separated and distributed over an area shall be filled with spalls, finer fragments and earth to form a solid compact mass.

G. Placement and Compaction:

6) Document soil conditions and compaction requirements prior to placing concrete for pads, slabs, pavements and footing foundations.

7) Place backfill and fill materials in layers not more than eight to twelve inches (8-12") in loose state for material compacted by heavy compaction equipment, and not more than six to eight inches (6-8") in loose state for material compacted by hand-operated tampers.

8) Each embankment left shall be leveled off by suitable grading equipment and shall be compacted to the specified dry density for roads.

9) Before compaction, moisten or aerate each layer as necessary to provide optimum moisture content. Compact each layer to required percentage of maximum dry density or relative dry density for each area classified. Do not place concrete work, backfill or fill material on surfaces that are muddy, frozen, or contain frost or ice.

10) The contractor shall make sure that adequate moisture is present in the subbase material under all foundations while it cures so that the concrete does not loose any of its water content.

11) Place backfill and fill materials evenly adjacent to structures.

12) No subsequent layer shall be placed until the specified compaction is obtained for the previous lift.

3.5 UNSUITABLE MATERIALS

A. The Contractor's attention is directed to the fact that unsuitable materials such as organic material, peat, silt or combinations thereof, having unsuitable bearing properties may be encountered at the depths indicated for excavations.

B. If unsuitable material is encountered at the depths indicated on the drawings for bottom limit of excavation, the Contractor shall immediately notify the Owner and shall not proceed further until instructions are given.

C. The Contractor shall satisfactorily excavate and remove all unsuitable material to lines, grades and limits indicated on the drawings or as directed in writing by the Owner and shall satisfactorily dispose of such material, off the site.

D. Where pile support of utilities or foundation systems is indicated or directed, complete removal of unsuitable material is not required.

E. The resulting excavations shall be refilled with thoroughly compacted gravel or crushed stone refill or other materials suitable for fill or refill as so ordered by the Owner. Materials are to be from on-site or off-site locations and placed to the grade established for sub-grade provided levels as specified herein and on the drawings.

F. The removal of unsuitable bearing materials shall be paid for at the Contractor's unit price per cubic yard, for "Removal of Unsuitable Materials and Refill".

3.6 OVEREXCAVATION

A. Excavation of earth beyond limits, indicated or authorized, shall be refilled, at no additional expense to the Owner, with Type A or D gravel or other approved materials compacted to the maximum dry density requirements specified elsewhere herein.

3.7 SHEETING AND SHORING

A. Excavations shall be adequately sheeted, shored and braced, as necessary, to permit proper excavation of the work and to protect other structures, utilities, all slopes and earth banks. Sheeting materials of timber, metal or other supports shall be installed as required to prevent cave-ins or settlement and to protect workmen, adjacent structures and utilities. Shoring and sheeting may be removed as the backfilling progresses, but only when banks are safe against caving.

B. Care shall be taken to prevent voids in removing sheeting or bracing. Voids, if formed, shall immediately be filled with sand.

C. The installation of sheeting, shoring and bracing shall comply with the safety precautions as outlined in the Associated General Contractors of America "Manual of Accident Prevention in Construction", and all local, state and Federal regulations. Sheeting, shoring and bracing shall be designed by a state licensed Engineer retained by the Contractor, who shall submit three certified copies of all compactions prior to the installation of any sheeting.

D. The Contractor may elect to employ a steel trenching box for pipe trenching in lieu of using sheeting or shoring techniques as approved by the Owner.

E. At locations where temporary sheeting is indicated or is directed to be used, the Contractor shall use caution to limit the width of the excavation to no more than is necessary to accommodate the sheeting and bracing.

3.8 SUBSURFACE REMOVALS

A. Foundation walls, retaining walls and other existing structures shall be removed to the extent required to provide not less than twelve inches of cover to the finished grade over any part of the structure left-in-place, unless otherwise noted on the drawings or as ordered by the Owner. Existing pavements, including cinders, shall be removed to the extent directed and required for new construction and to at least 12 inches below the finished grade, unless otherwise noted on the drawings or directed by the Engineer.

B. Old paved cellar floors shall be broken up where buildings have been removed.

C. When pipe lines, manholes, etc., are to be abandoned, the pipe lines shall be either fully dismantled or capped and sand filled, unless otherwise directed in the field by the Engineer.

D. Cellars, manholes, etc., left-in-place shall be filled with an approved material and compacted as required. The sites of subsurface removals shall be graded as shown or as directed.

3.9 DEWATERING, CONTROL AND DIVERSION OF WATER

A. The excavations for work required under this contract are to some extent below existing ground water levels. The Contractor shall operate and maintain all pumps, drains, or any facility necessary for the control, collection and disposal of all surface and subsurface water encountered in the performance of the contract work. All excavations shall be kept dry at all times and all construction work shall be performed in the dry, unless otherwise authorized or directed.

B. The Contractor shall submit a proposed dewatering plan to the Engineer for review describing its methods and means and suitability for the existing conditions prior to excavation activities.

C. Any damage to existing facilities or new work resulting from the failure of the Contractor to maintain the work areas in a dry condition shall be repaired by the Contractor at no additional expense to the Owner. Pumping shall be continuous where specified or directed or as necessary to protect the work and to maintain satisfactory progress.

D. Dewatering systems for excavations situated below the ground water table shall be capable of lowering and maintaining the ground water level in the vicinity of the excavation at an elevation at least six inches below the invert of the pipes and bottom of structures, and maintain this depressed water level until the pipes or structures to be constructed therein are completed and backfilled.

E. Any water removed from earthwork operations by pumping or other means shall be disposed of in such a manner as to avoid interference with vehicular or pedestrian traffic, and as to prevent damage to adjacent property, construction and not cause erosion of the soil. The Contractor shall not discharge water from dewatering operations directly into any live or intermittent stream, channels, wetlands or surface water body. Water from dewatering operations shall be treated and disposed of in an approved method to reduce the amount of sediment contained in the water to allowable levels, as approved by the Owner.

F. All costs incurred relative to the control and removal of water from trenches or excavations shall be included by the Contractor in his bid price.

G. The Contractor's pumping and dewatering operations shall be carried out in such a manner that the ground water table in nearby private water supply wells, where applicable, is unaffected. Any damages resulting from the lowering of the ground water table or the drying up of these wells shall be the sole responsibility of the Contractor, at no additional expense to the Owner.

3.10 COMPACTION

A. Control soil compaction during construction providing minimum percentage of density specified for each area classification.

B. Percentage of Maximum Density Requirements - Compact fills, refills, backfills and undisturbed soils to not less than the following percentages of maximum dry density for soils which exhibit a well-defined moisture density relationship determined in accordance with ASTM D1557 Method D. Verification in the field of the maximum dry density shall be in accordance with ASTM D1556, D2167 or an approved nuclear testing device. Depths for fills, refills and backfill are defined in loose state.

1) Structures: Compact top twelve inches of sub-grade and each layer of backfill or fill material at 95 percent of maximum dry density.

2) Lawn or Unpaved Non-Traffic Areas: Compact to sub-grade at 90 percent of maximum dry density.

3) Walkways: Compact top six inches of sub-grade and each layer of backfill or fill material at 95 percent of maximum dry density.

4) Pavement Areas: Compact top twelve inches of sub-grade and each layer of backfill or fill material at 95 percent of maximum dry density.

5) Underground Utilities: Compact Select Backfill layer to a compacted level twelve inches over the pipe carefully and solidly tamped to 95 percent of maximum dry density. Fills placed under utilities, sewers, manholes, tanks, etc., shall be compacted to 95 percent of maximum dry density.

C. It is the intent of these compaction requirements that the minimum in-place dry density of the compacted materials resulting from the compacting equipment will be equal to or greater than the minimum percentages specified herein. Additional passes of the equipment used shall be required if the minimum percentage of ASTM in-place dry density requirements are not obtained.

D. Testing:

1) Laboratory and field density test to determine the actual in-place densities being attained shall be made at the Contractor's expense by an independent state certified testing laboratory and in sufficient quantity to determine that the required compaction is being attained.

2) Frequency in Fills, Refills and Backfilling: One test per lift per 2,000 SFT, not less than two tests per lift, unless otherwise directed by the Engineer.

3) Frequency at Final Subgrade: Field density tests shall be required under every spread footing and small equipment foundation, a minimum of three for large equipment foundations, (i.e., boilers, engines, oil storage tanks, exhaust stacks, etc.), and one at every building corner and at intervals of 30-40 linear feet for exterior wall footings. Road and parking areas shall require one/2000 SFT of paved area, randomly taken in close proximity to proposed edges of pavement for roads and access areas. The distribution of test sites for parking areas shall be approved by the Engineer.

4) The Contractor shall in no case build or install any pavement concrete, masonry or other structure on an earth foundation until it shall have been tested and approved by the testing laboratory. The Contractor shall be responsible for coordinating the work with an outside testing service with all reports submitted to the Engineer to show compliance. He shall render such aid as may be required for making tests of the bearing capacity of the earth, and shall dig test pits and make other excavations, as directed, to determine the character of the foundation.

5) In case the material encountered at any point in excavation is not suitable, in the opinion of the Engineer and Owner, for carrying the loads to be placed upon it, the foundation shall be made suitable in the manner directed, as approved.

3.11 DISPOSAL EXCESS AND WASTE MATERIALS

A. Remove waste materials, including unacceptable excavated earth and rock material, trash and debris, and dispose of it off Owner's property at Contractor's expense. Contractor is to leave site clean and free of all deleterious and excess materials.

END OF SECTION - EARTHWORK SPECIFICATIONS

REVISION			
NO.	DATE	DESCRIPTION	DRAWN BY	CHECKED BY

COPYRIGHT © 2020 THESE PLANS ARE THE PROPERTY OF DYMAR, PREPARED AS AN INSTRUMENT OF SERVICE FOR USE SOLELY WITH RESPECT TO THIS PROJECT. THE PROFESSIONAL OF RECORD FOR THIS PROJECT, DYMAR DOES NOT GUARANTEE THESE PLANS TO REFLECT THE TRUE CONDITIONS. THE CONTRACTOR SHALL VERIFY ALL FIELD CONDITIONS AND DIMENSIONS AND IS RESPONSIBLE FOR NOTIFYING DYMAR IF A DISCREPANCY EXISTS, THERE AFTER DYMAR SHALL HAVE TRIAL SAY.

DYMAR
800 Main Street South · Southbury, Ct. 06488 · (203) 267-1046 · Fax (203) 267-1547
ENGINEERING · PLANNING · SURVEYING · DEVELOPMENT SERVICES

DRAWINGS TO BE USED FOR LAND USE SUBMISSIONS ONLY
NOT FOR CONSTRUCTION

CLIENT: Estate of Dina M. & James S. Belta
128 Bayberry Lane
Westport, Connecticut 06880

PROJECT: Open Space Residential Subdivision
128 Bayberry Lane
Westport, Connecticut 06880

TITLE: Earthwork Specifications

NOT VALID WITHOUT SIGNATURE AND ORIGINAL SEAL

MARK E. LANCOR, P.E. #12369

DATE:	05/14/2020
SCALE:	N/A
DESIGNED BY:	M.E.L.
DRAWN BY:	C.B.B.
CHECKED BY:	M.E.L.
JOB NO.:	00934
DRAWING NO.:	C-9B

SHEET 1 OF 2

F:\00934 - Bayberry Lane-Westport\Civil\Dwg\009B.dwg, 85, 5/13/2020 12:22:48 PM, gensus, AutoCAD PDF (Web and Mobile).pc3, ARCH full bleed D (24.00 x 36.00 Inches), 1:1

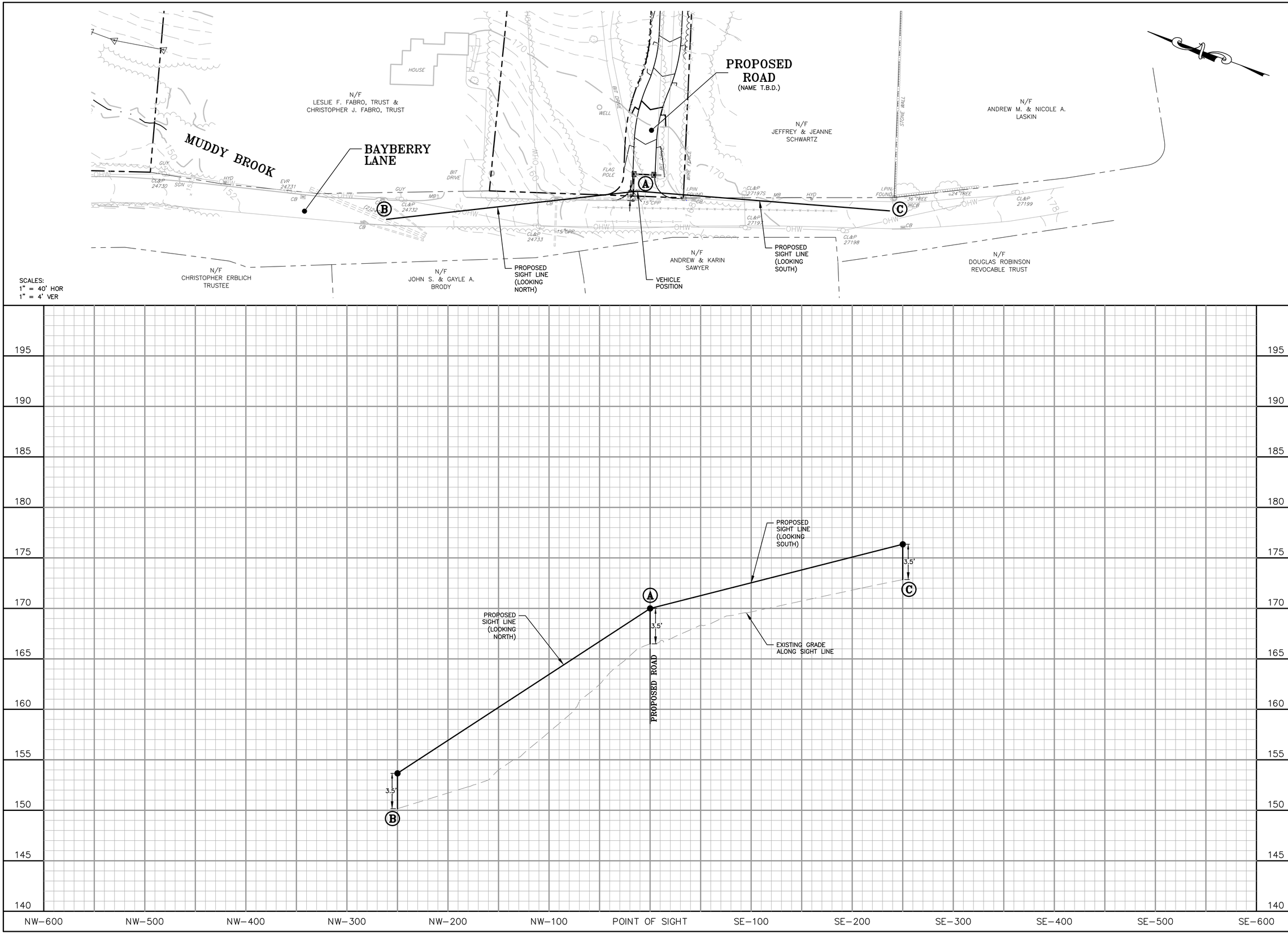

NO.	DATE	REVISION DESCRIPTION	DRAWN BY	CHECKED BY

COPYRIGHT © 2020 THESE PLANS ARE THE PROPERTY OF DYMAR, PREPARED AS AN INSTRUMENT OF SERVICE. THEY MUST NOT BE REPRODUCED OR TRANSFERRED TO OTHERS WITHOUT THE CONSENT OF DYMAR. THESE PLANS ARE FOR THIS PROJECT. DYMAR DOES NOT GUARANTEE THESE PLANS TO REFLECT THE TRUE CONDITIONS. THE CONTRACTOR SHALL VERIFY ALL FIELD CONDITIONS AND DIMENSIONS AND IS RESPONSIBLE FOR NOTIFYING DYMAR IF A DISCREPANCY EXISTS. THERE AFTER, DYMAR SHALL WAIVE FINAL SAY.

DYMAR
800 Main Street South · Southbury, Ct. 06488 · (203) 267-1046 · Fax (203) 267-1547
ENGINEERING · PLANNING · SURVEYING · DEVELOPMENT SERVICES

DRAWINGS TO BE USED FOR LAND USE SUBMISSIONS ONLY
NOT FOR CONSTRUCTION

CLIENT: Estate of Dina M. & James S. Belta
128 Bayberry Lane
Westport, Connecticut 06880

PROJECT: Open Space Residential Subdivision
128 Bayberry Lane
Westport, Connecticut 06880

TITLE: Sight Line Drawing

NOT VALID WITHOUT SIGNATURE AND ORIGINAL SEAL

MARK E. LANCOR, P.E. #12369

DATE:	05/14/2020
SCALE:	AS NOTED
DESIGNED BY:	M.E.L.
DRAWN BY:	C.B.B.
CHECKED BY:	M.E.L.
JOB NO:	00934
DRAWING NO:	C-10

F:\00934 - Bayberry Lane-Westport\Civil\Dwg\010.dwg, C10, 5/13/2020 12:22:50 PM, genus, AutoCAD PDF (Web and Mobile).pc3, ARCH full bleed D (24.00 x 36.00 Inches), 1:1

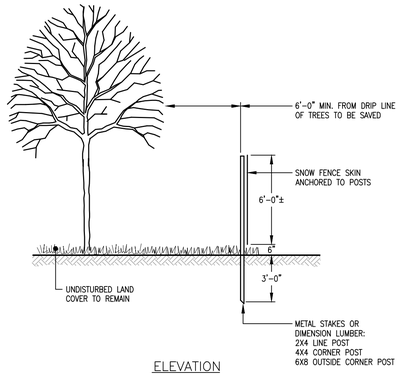

ELEVATION

LND 072

TREE PROTECTION DETAIL

N.T.S.

NOTES:
1. WHERE PLANTING PITS ARE DUG WITH AUGERING DEVICES, RESULTANT GLAZING OR HARDENING OF PIT SURFACES SHALL BE SCAR SCARIFIED PRIOR TO PLANTING.
2. DECIDUOUS TREES OF 3" CAL. OR LESS AND EVERGREEN TREES OF 8' OR LESS, SHALL BE STAKED; MIN. 2 PER TREE OF THIS SIZE RANGE.
3. DECIDUOUS TREES OVER 3" CAL. AND EVERGREEN TREES OVER 8' SHALL BE GUYED; MIN. 3 PER TREE OF THIS SIZE RANGE, 4 GUYS PER TREE IF OVER 3½" CAL.
4. WHERE SPACE PROHIBITS GUYING: 3 STAKES PER TREE FOR 3½" CAL, 4 STAKES PER TREE IF OVER 3½" CAL.
5. DETAIL MEANT AS GENERAL EXAMPLE OF PROPER PLANTING METHOD; WHERE DETAIL AND SPECIFICATIONS DIFFER THE LATTER SHALL PREVAIL.
6. CUT BURLAP AND WIRE BASKETS FROM TOP THIRD OF ROOT BALL; REMOVE ALL SYNTHETIC WRAPS, ROPES AND TWINES ENTIRELY FROM ROOT BALL.

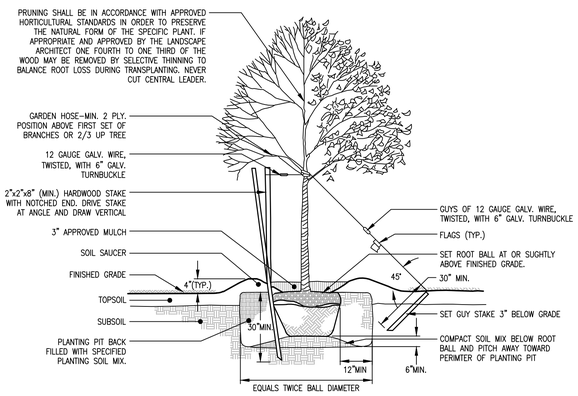

LND 074A

TREE PLANTING DETAIL

N.T.S.

TREE AND SHRUB PLANTING LIST					
KEY	COMMON NAME	BOTANICAL NAME	QUAN.	SIZE	REMARKS
Af	FREEMAN MAPLE	Freeman: "Autumn Blaze"	13	2 – 2-1/2", Cal.	B&B
Ns	TUPELO/SOUR GUM	Nyssa Sylvatica "Wildfire"	13	2 – 2-1/2", Cal.	B&B
Tc	WHITE SPRUCE	Picea Glauca	22	6'-7' HT, 15' O.C.	B&B
Qr	NORTHERN RED OAK	Quercus rubra	12	2 – 2-1/2", Cal.	B&B

NOTE: PLANT LOCATIONS CAN VARY BASED ON FIELD CONDITIONS.

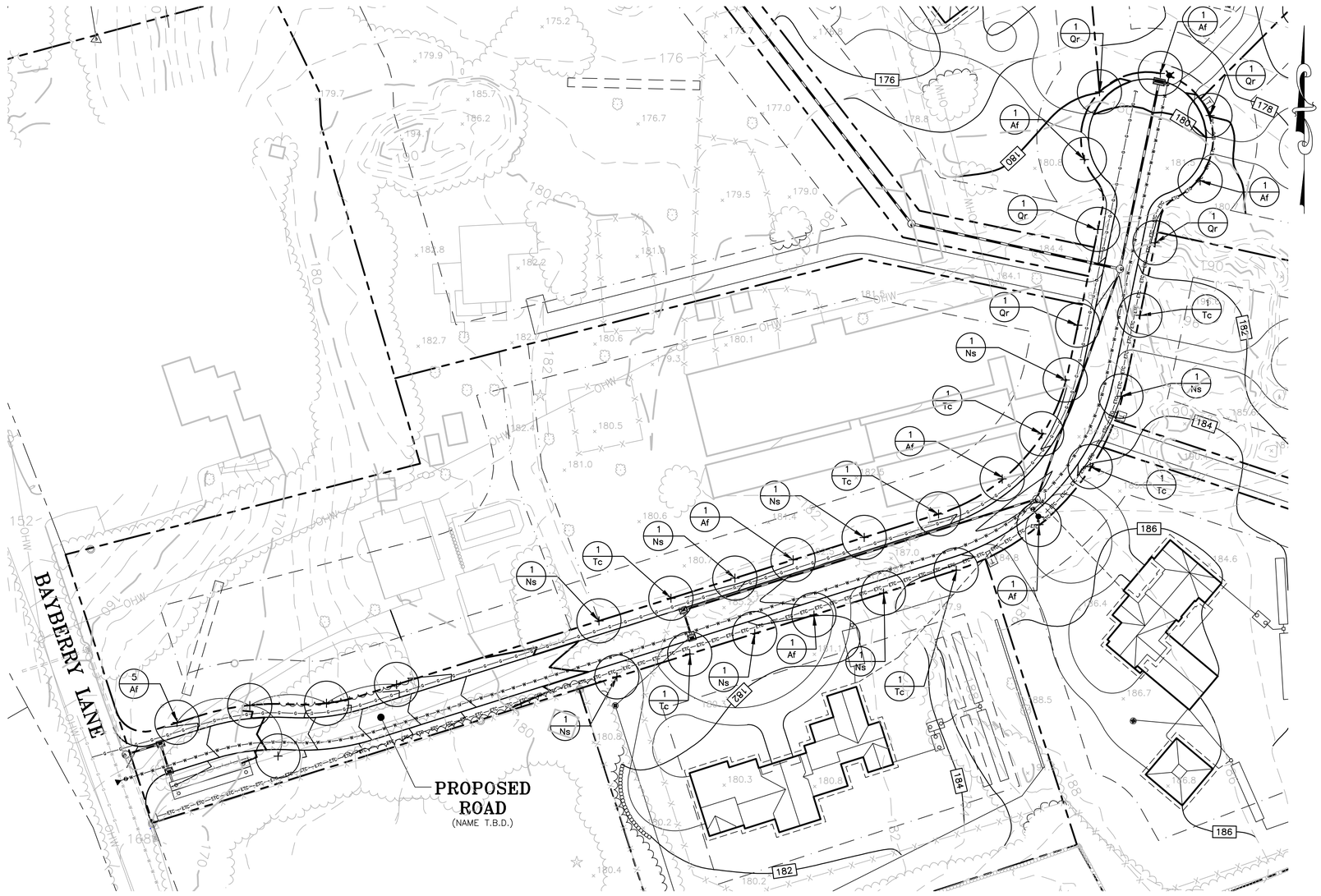

NOTE:
1. THE CONTRACTOR SHALL NOTIFY "CALL BEFORE YOU DIG" AT LEAST 72 HOURS PRIOR TO THE START OF EXCAVATION, BY CALLING 1-800-922-4455.

REVISION				
NO.	DATE	DESCRIPTION	DRAWN BY	CHECKED BY

COPYRIGHT © 2020 THESE PLANS ARE THE PROPERTY OF DYMAR, PREPARED AS AN INSTRUMENT OF SERVICE. REPRODUCTION OF THESE PLANS IN WHOLE OR IN PART IS PROHIBITED WITHOUT THE EXPRESS WRITTEN CONSENT OF THE PROJECT. DYMAR DOES NOT GUARANTEE THESE PLANS TO REFLECT THE TRUE CONDITIONS. THE CONTRACTOR SHALL VERIFY ALL FIELD CONDITIONS AND DIMENSIONS AND IS RESPONSIBLE FOR NOTIFYING DYMAR IF A DISCREPANCY EXISTS. THERE AFTER, DYMAR SHALL HAVE FINAL SAY.

DYMAR
800 Main Street South · Southbury, Ct. 06488 · (203) 267-1046 · Fax (203) 267-1547
ENGINEERING · PLANNING · SURVEYING · DEVELOPMENT SERVICES

DRAWINGS TO BE USED FOR LAND USE SUBMISSIONS ONLY
NOT FOR CONSTRUCTION

CLIENT: Estate of Dina M. & James S. Belta
128 Bayberry Lane
Westport, Connecticut 06880

PROJECT: Open Space Residential Subdivision
128 Bayberry Lane
Westport, Connecticut 06880

TITLE: Street Tree Landscape Plan

NOT VALID WITHOUT SIGNATURE AND ORIGINAL SEAL

MARK E. LANCOR, P.E. #12359

1 2

DATE:	05/14/2020
SCALE:	1"=40'
DESIGNED BY:	M.E.L.
DRAWN BY:	C.B.B.
CHECKED BY:	M.E.L.
JOB NO.:	00934
DRAWING NO.:	C-11A

F:\00934 - Bayberry Lane-Westport\Civil\Dwg\011A.dwg, C11, 5/13/2020 12:22:52 PM, gemus, AutoCAD PDF (Web and Mobile).pc3, ARCH full bleed D (24.00 x 36.00 Inches), 1:1

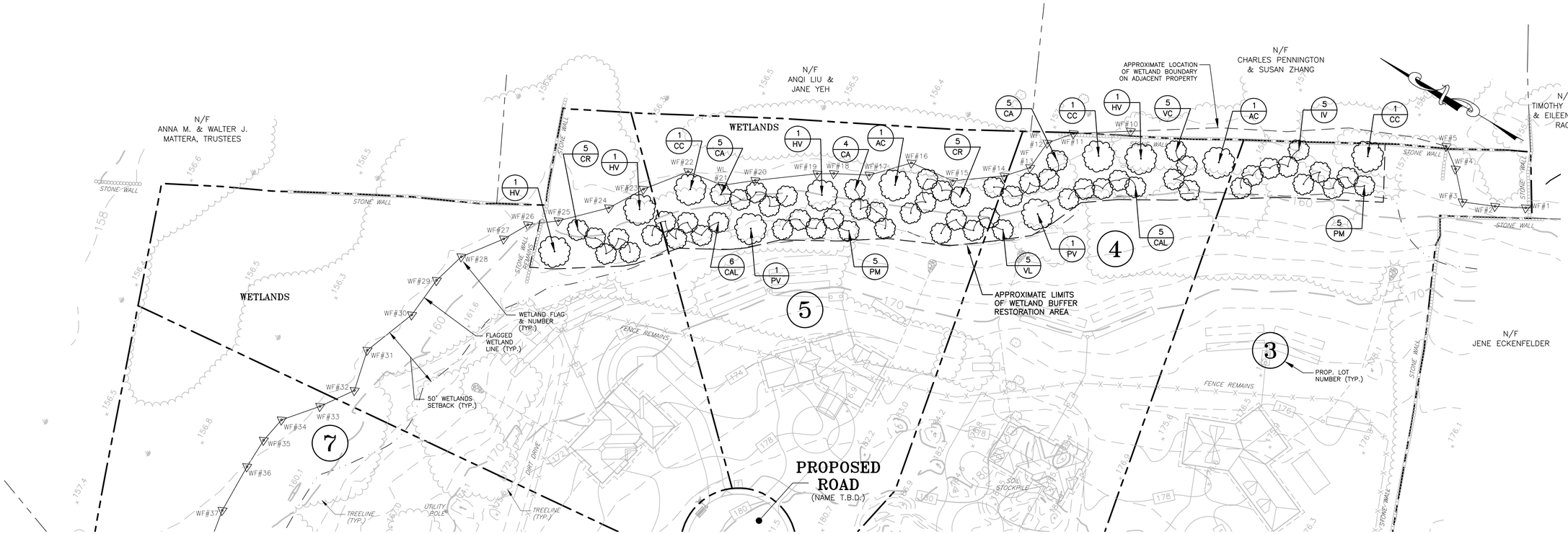

WETLAND BUFFER RESTORATION NARRATIVE

THE PROPOSED WETLAND BUFFER RESTORATION AREA CONSISTS MAINLY OF SCRUB–SHRUB HABITAT AT THE TRANSITION AREA BETWEEN ABANDONED AGRICULTURAL FIELDS AND ADJACENT FORESTED AND EMERGENT WETLAND HABITATS. THE SCRUB–SHRUB HABITAT CONTAINS NON–NATIVE INVASIVE PLANT SPECIES INCLUDING MULTIFLORA ROSE (ROSA MULTIFLORA), ORIENTAL BITTERSWEET (CELASTRUS ORBICULATUS) AND JAPANESE STILT GRASS (ALLARIA PETIOLATA). THE FOLLOWING ACTIVITIES ARE PROPOSED TO REMOVE NON–NATIVE INVASIVE PLANT SAND REVEGETATE THE AREA WITH NATIVE SHRUBS AND SMALL TREES.

1. YOUNG STEM OF MULTI–FLORA ROSE CAN BE REMOVED THROUGH HAND PULLING. BUT TOTAL ERADICATION IS BEST ACCOMPLISHED THROUGH THE USE OF HERBICIDES (GLYPHOSATE). GLYPHOSATE IS MOST EFFECTIVE WHEN APPLIED AFTER FLOWERING (EARLY SUMMER) UNTIL EARLY FALL. CUT–STUMP TREATMENTS WITH BOTH HERBICIDES ALSO PROVIDE CONTROL, BUT CUTTING STUMPS IN ESTABLISHED THICKETS IS VERY DIFFICULT BECAUSE OF THE NUMEROUS THORNY BRANCHES.
2. LIGHT INFESTATIONS OF ORIENTAL BITTERSWEET CAN BE CONTROLLED BY MOWING OR CUTTING VINES AND HAND PULLING ROOTS. VINES WITH FRUITS SHOULD BE BAGGED AND DISPOSED OF IN THE TRASH TO PREVENT SEED DISPERSAL. HEAVY INFESTATIONS CAN BE CONTROLLED BY CUTTING VINES AND IMMEDIATELY TREATING CUT STEMS WITH HERBICIDE. CUTTING VINES WITHOUT REMOVING OR KILLING THE ROOTS WILL STIMULATE VIGOROUS RE–GROWTH RESULTING IN LARGER PATCHES. CARE SHOULD BE TAKEN TO CUT AND TREAT ONLY BITTERSWEET VINES AND NOT NATIVE PLANTS. IN LATE SUMMER, CUT VINES AND APPLY A SYSTEMIC HERBICIDE LIKE TRICLOPYR (GARLON 3A™) OR GLYPHOSATE (ROUNDUP ™) TO THE CUT. TO ENSURE UPTAKE OF THE HERBICIDE BEFORE THE PLANT SEALS OFF THE CUT, APPLY IMMEDIATELY AFTER CUTTING, WITHIN 5–15 MINUTES. APPLY WITH A SPONGE OR PAINT BRUSH. ANY VINES LEFT HANGING IN THE TREES WILL DECOMPOSE AND FALL WITHIN TWO TO THREE YEARS.
3. HAND REMOVAL OF GARLIC MUSTARD IS POSSIBLE FOR LIGHT INFESTATIONS AND WHEN DESIRABLE NATIVE SPECIES CO–OCCUR. CARE MUST BE TAKEN TO REMOVE THE PLANT WITH ITS ENTIRE ROOT SYSTEM BECAUSE NEW PLANTS CAN SPROUT FROM ROOT FRAGMENTS. THIS IS BEST ACHIEVED WHEN THE SOIL IS MOIST, BY GRASPING LOW AND FIRMLY ON THE PLANT AND TUGGING GENTLY UNTIL THE MAIN ROOT LOOSENS FROM THE SOIL AND THE ENTIRE PLANT PULLS OUT. PULLED PLANTS SHOULD BE REMOVED FROM SITE IF AT ALL POSSIBLE, ESPECIALLY IF FLOWERS ARE PRESENT.
   FOR VERY HEAVY INFESTATIONS, WHERE THE RISK TO DESIRABLE PLANT SPECIES IS MINIMAL, APPLICATION OF THE SYSTEMIC HERBICIDE GLYPHOSATE (E.G., ROUNDUP) IS ALSO EFFECTIVE. HERBICIDE MAY BE APPLIED AT ANY TIME OF YEAR, INCLUDING WINTER (TO KILL OVER WINTERING ROSETTES), AS LONG AS THE TEMPERATURE IS ABOVE 50 DEGREES F. AND RAIN IS NOT EXPECTED FOR ABOUT 8 HOURS. EXTREME CARE MUST BE TAKEN NOT TO GET GLYPHOSATE ON DESIRABLE PLANTS AS THE PRODUCT IS NON–SELECTIVE AND WILL KILL ALMOST ANY PLANT IT CONTACTS. SPRAY SHIELDS MAY BE USED TO BETTER DIRECT HERBICIDE AND LIMIT NON–INTENTIONAL DRIFT
4. UPON REMOVAL OF NON–NATIVE INVASIVE PLANTS, NATIVE SHRUBS AND SMALL TREES ARE TO BE PLANTED PER THE PLANTING TABLE BELOW.
5. ALL DISTURBED OR UN–VEGETATED SOIL AREAS SHALL BE SEEDED WITH NEW ENGLAND SEMI–SHADE GRASS AND FORBS MIX AS AVAILABLE FROM NEW ENGLAND WETLAND PLANTS, INC. OR AN EQUIVALENT SEED MIX.
6. THE RESTORATION AREA IS TO BE MONITORED FOR A MINIMUM OF THREE (3) GROWING SEASONS. ANY REESTABLISHMENT OF INVASIVE PLANT SPECIES WILL BE CONTROLLED THROUGH REPEATED TREATMENT/REMOVAL AS NEEDED.

PROPOSED PLANTING LIST

KEY	SPECIES	COMMON NAME	QUAN.	SIZE
AC	*AMELANCHIER CANADENSIS*	SHADBLOW	3	3–4'
CC	*CARPINUS CAROLINIANA*	HORNBEAM	3	3–4'
CA	*CORNUS AMOMUM*	SILKY DOGWOOD	9	3–4'
COA	*CORNUS ALTERNIFLORA*	ALTERNATE LEAVED DOGWOOD	11	3–4'
CR	*CORNUS RACEMOSA*	GRAY DOGWOOD	10	3–4'
CLA	*CLETHRA ALNIFOLIA*	SWEET PEPPERBUSH	5	3–4'
HV	*HAMAMELIS VIRGINIANA*	WITCH HAZEL	3	3–4'
IV	*ILEX VERTICILLATA*	WINTERBERRY	5	3–4'
PM	*PHOTONIA MELANOCARPA*	BLACK CHOKEBERRY	10	3–4'
PV	*PRUNUS VIRGINIANA*	CHOKEBERRY	2	3–4'
VC	*VACCINIUM CORYMBOSUM*	HIGHBUSH BLUEBERRY	5	3–4'
VL	*VIBURNUM LENTAGO*	NANNYBERRY	5	3–4'

PLANTING NOTES

1. ALL PLANT MATERIALS SHALL BE INSPECTED FOR DEFECTS OR DAMAGE BEFORE PLANTING. SUBSTANDARD PLANTS SHALL BE RETURNED TO, AND REPLACED BY THE NURSERY. ACCEPTABLE PLANTS ARE TO BE PLANTED PER THE SPECIFICATIONS OF THE PLANTING PLAN. IT IS THE RESPONSIBILITY OF THE PLANTING CONTRACTOR TO PROVIDE FOR THE SAFEKEEPING AND MAINTENANCE OF THESE PLANTS FOR THE DURATION OF SITE CONSTRUCTION ACTIVITY. PROVISIONS FOR REGULAR WATERING SHALL BE MADE BY THE PLANTING CONTRACTOR FOR THE DURATION OF THE PLANT'S FIRST YEAR IN THE GROUND.
2. PLANT LOCATIONS ARE SUBJECT TO FIELD REVISION BASED ON LOCATIONS OF EXISTING DESIRABLE PLANT SPECIES AND OTHER EXISTING CONDITIONS. ANY CHANGES TO PLANT LOCATION OR SPECIES SELECTION ARE TO BE REVIEWED BY THE ENVIRONMENTAL CONSULTANTS AND APPROVED BY CONSERVATION COMMISSION STAFF.
3. ALL PLANTINGS SHALL BE PERFORMED AND COMPLETED BETWEEN OCTOBER 1 AND THE DATE AT WHICH FROZEN SOIL CONDITIONS EXIST, AND/OR BETWEEN APRIL 15 AND JUNE 15.
4. PLANT NURSERY STOCK BY EXCAVATING A SUFFICIENTLY LARGE ENOUGH HOLE TO ACCOMMODATE THE PLANTS AND ROOTS. THE PLANTING HOLE SHALL THEN BE FILLED WITH WATER SUFFICIENT TO SATURATE THE SURROUNDING SOIL. THE ROOTS SHALL BE SPREAD OUT ADEQUATELY TO PROMOTE GOOD GROWTH. ALL PLANTS SHALL BE SET AT THE LEVEL OF THE EXISTING GRADE.
5. THE PLANTING HOLE SHALL BE FILLED WITH SOIL AND FIRMED BY TAMPING TO FILL ANY VOIDS. APPLY ADEQUATE DEPTH OF MULCH AROUND SHRUBS AND TREES TO INHIBIT WEED GROWTH DURING THE PLANTS FIRST YEAR OF GROWTH.
6. AN ADEQUATE DEPTH OF MULCH IS TO BE PLACED AROUND THE PLANTED SHRUBS AND TREES TO INHIBIT WEED GROWTH DURING THE PLANTS FIRST YEAR OF GROWTH.
7. PROVIDE ADEQUATE IRRIGATION AND PROTECTION FROM DEER UNTIL PLANTED AREAS ARE ESTABLISHED.

NOTES:
1. WHERE PLANTING PITS ARE DUG WITH AUGERING DEVICES, RESULTANT GLAZING OR HARDENING OF PIT SURFACES SHALL BE SCARIFIED PRIOR TO PLANTING.
2. CUT BURLAP FROM TOP THIRD OF ROOT BALL (FOR ALL BALLED AND BURLAPPED MATERIAL), REMOVE ALL SYNTHETIC WRAPS, ROPES AND TWINES ENTIRELY FROM THE ROOT BALL OR PLANT.
3. DETAIL MEANT AS GENERAL EXAMPLE OF PROPER PLANTING METHOD, WHERE DETAIL AND SPECIFICATIONS DIFFER, THE LATTER SHALL PREVAIL.

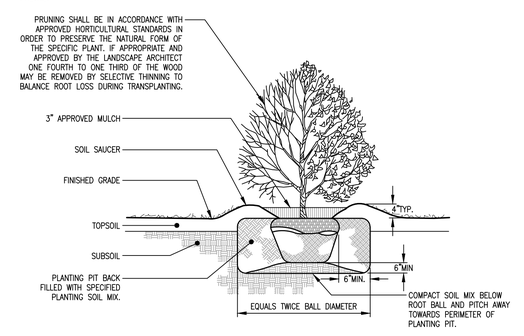

LND 076A

SHRUB PLANTING DETAIL

N.T.S.

NOTE:
1. THE CONTRACTOR SHALL NOTIFY "CALL BEFORE YOU DIG" AT LEAST 72 HOURS PRIOR TO THE START OF EXCAVATION, BY CALLING 1–800–922–4455.

NO.	DATE	REVISION DESCRIPTION	DRAWN BY	CHECKED BY

COPYRIGHT © 2020. THESE PLANS ARE THE PROPERTY OF DYMAR, PREPARED AS AN INSTRUMENT OF SERVICE. THEY MAY NOT BE USED FOR ANY PURPOSE NOT SPECIFICALLY AGREED TO IN WRITING BY DYMAR. THE CONTRACT FOR THIS PROJECT, DYMAR DOES NOT GUARANTEE THESE PLANS TO REFLECT THE TRUE CONDITIONS. THE CONTRACTOR SHALL VERIFY ALL FIELD CONDITIONS AND DIMENSIONS AND IS RESPONSIBLE FOR NOTIFYING DYMAR IF A DISCREPANCY EXISTS. THERE AFTER, DYMAR SHALL WAIVE TRUE, SAY.

DYMAR
800 Main Street South · Southbury, Ct. 06488 · (203) 267-1046 · Fax (203) 267-1547
ENGINEERING · PLANNING · SURVEYING · DEVELOPMENT SERVICES

DRAWINGS TO BE USED FOR LAND USE SUBMISSIONS ONLY
NOT FOR CONSTRUCTION

CLIENT: Estate of Dina M. & James S. Belta
128 Bayberry Lane
Westport, Connecticut 06880

PROJECT: Open Space Residential Subdivision
128 Bayberry Lane
Westport, Connecticut 06880

TITLE: Wetlands Buffer Planting Plan

NOT VALID WITHOUT SIGNATURE AND ORIGINAL SEAL

MARK E. LANCOR, P.E. #12369

2
1

DATE:	05/14/2020
SCALE:	1"=40'
DESIGNED BY:	M.E.L.
DRAWN BY:	C.B.B.
CHECKED BY:	M.E.L.
JOB NO:	00934
DRAWING NO:	C-11B

F:\00934 - Bayberry Lane-Westport\Civil\Dwg\011B.dwg, 11B, 5/13/2020 12:22:54 PM, gensus, AutoCAD PDF (Web and Mobile).pc3, ARCH full bleed D (24.00 x 36.00 Inches), 1:1

PLANTING NOTES:

A. GENERAL PLANTING NOTES

1. All plant materials shall be inspected for defects or damage before planting. Substandard plants shall be returned to, and replaced by the contractor. Acceptable plants are to be planted per the specifications of the planting plan. It is the responsibility of the general contractor to provide for the safekeeping and maintenance of these plants for the duration of site construction activity. Once planted, all machinery shall avoid these planted areas, which should be demarcated clearly by flagged field stakes.

2. All plant material placement is subject to field adjustment in reponse to site conditions. These adjustments shall be at the discretion of the Landscape Architect, Environmental Monitor, or Wetland Scientist.

3. All plant materials are subject to replacement by suitable alternatives per agreement between Owner, Wetland Scientist, Nursury contractor, and appropriate regulatory agencies.

4. Plant materials are to be planted in accordance with requirements specified in the planting specifications.

5. An application of lime may be required in addition to standard application of a complete fertilizer compound at the discretion of the Landscape Architect, Site Supervisor, Environmental Monitor or Wetland Scientist. Testing of the soil by an acceptable laboratory prior to planting will be the responsibility of the site contractor.

B. GRASS & WILDFLOWER ESTABLISHMENT

The work under this item shall conform to the requirements of Section 9.50 of the CTDOT standards, supplemented and ammended as follows.

1. The work included in this item shall consist of providing an accepted stand of established grass by furnishing and placing seed and mulch on all areas to be treated as shown on the plans or where designated by the Environmental Monitor or Site Supervisor.

2. Grass and wildflower seed shall be from commercial seed suppliers with appropriate composition for the transition slopes and detention basin and be approved by the Wetland Scientist and Site Supervisor.

   a. UPLAND & TRANSITIONAL SLOPES AND ACCESS

   - *New England Conservation/Showy Wildlife Mix – 25 lbs./ac.*

     INCLUDING Adropogon gerardii, Panicum virgatum, Schizachyrium scoparium, Elymus canadensis and Aster laevis.

     This mixture, or approved equal, can be obtained commercially from New England Wetland Plants, 820 West St. Amherst, MA 01102 (413) 548–8000 www.newp.com

   b. DETENTION BASIN

   - *New England Erosion Control/Restoration Mix – 35 lbs./ac.*

     INCLUDING Panicum virgatum, Festuca rubra, Carex vulpinoidea, Bidens cerna, Juncus effusus, and Eupatorium maculatum.

     This mixture, or approved equal, can be obtained commercially from New England Wetland Plants, 820 West St., Amherst, MA 01102. (413) 548–8000 www.newp.com

   - *Northeast Wetland Hummock Seed Mix – 3.25 lbs./ac.*

     INCLUDING Scirpus atrovirens, Juncus effusus, Carex vulpinoidea, Leersia oryzoides, Carex comosa, Carex lurida, Carex lupulina.

     This mixture, or approved equal, can be optained commercially from Southern Tier Consulting, Inc. 2701–A Route 305, P.O. Box 30, West Clarksville, NY 14786. (716) 968–3129 Fax (716) 968–3122, www.southerntierconsulting.com.

C. WATER QUALITY BASIN & WETLANDS SEED BED PREPARATION

1. The water quality basin / wetland areas shall be made friable and receptive to seeding by approved methods, which will not disrupt the line and grades for such surface as shown in the plans or as directed by the Environmental Monitor or Wetland Scientist and Project Engineer. In no event will seeding be permitted on hard or crusted soil surfaces. Fine grade and rake soil surface to remove stones larger than 2 inches in diameter.

2. Due to the nature of the site, general application rates will not be used. An acceptable laboratory will analyze representative samples of soil prepared seedbeds to determine the need for lime and fertilizer. The soil shall be tested for fertility, pH, bulk density, and textural anlaysis. Samples shall be collected at a rate of one composite sample (three samples per composite sample) per 15,000 square feet.

3. Based on the results of the soil analysis, work the specified quantities of soil amendments (lime, nitrogen, phosphorus, trace chemicals, organic) into the soil uniformly to a depth of 4 inches with suitable equipment following the contour lines.

D. SEED APPLICATION AND SCHEDULING

The calendar dates for seeding shall be within 7 days following final grading between the dates of April 15 and June 15, and August 15 and October 15. The grass seed mixture shall be applied by an argonomically acceptable procedure. The rate of application shall be as specified in plans or according to manufacturer's specifications unless otherwise directed by the Wetland Scientist. Increase seed mixture by 50% if hydroseeder is used.

E. MULCHING

Materials for this work shall conform to the requirements of Article M.13.05. Immediately following seeding, mulch the seeded surface with sterile straw at a rate of 1.5 to 2 tons/ac. or a minimum depth of 1 inch. Spread mulch by hand or mulch blower. Use appropriate tack to hold mulch in place, as needed. Do not use a harrow or grousers or track machine to punch mulch into place.

F. TOPSOIL

1. If the soil contains between 50 and 80% sand a minimum of 20% organic matter should be present.

2 Soils containing greater than 80% sand are not acceptable for use as topsoil in the detention basin / wetland; and topsoil must otherwise meet the criteria defined in Section M.13.01 of the CTDOT's "Standard Specifications for Roads, Bridges and Incidental Construction" (Form 814A/815), specifically as described below.

   a. *COMPOSITION*
   The topsoil to be furnished by the contractor must be loose and friable and free from refuse, stumps, roots, brush, weeds, rocks and stoes over one and one–quarter (1–1/4) inches in diameter. The topsoil must also be free from any material that will prevent the formation of a suitable seedbed or prevent seed germination and plant growth.

   b. *NOTIFICATION*
   The Contractor will notify the engineer of the location from which the Contractor proposes to furnish topsoil to the project at least 15 calendar days prior to delivery.

   c. *INSPECTION AND APPROVAL*
   The topsoil and its source will be inspected and approved by the engineer before the material is delivered to the project. Any material delivered to the project which does not meet specifications, or which has become mixed with undue amounts of subsoil during any operation at the source or during placing and spreading, will be rejected and must be replaced by the contractor with acceptable material at no additional cost.

3. If soil must be supplemented with organic material, the following sources are acceptable:

   a. *NATURAL WETLAND SOIL*
   Natural wetland soil from another source must be inpected at least 6 months prior to excavation and determined by Wetland Scientist to be free from seeds and roots of invasive species such as purple loosestrife (Lythrum salicaria) and common reed (Phragmites australis).

   b. *COMPOST*
   Municipal or commercial compost from a source approved by CTDOT Office of Environmental Planning may be used.

   c. *PEAT*
   To be acceptable, peat must be commercially packaged peat from sedge, sphagnum or reed sources. Material must be in such physical condition that it may be rudded through a one–half (1/2) inch mesh screen, and may be readily mixed with soil material. It must be free from sticks, roots, stones and other objectionable material. It must be delivered to the project in clean, new, sealed containers bearing the brand, net bulk, and name and address of the packer. The material must have an acidity that falls in the pH range of 3.0 to 7.0, a minimum organic content of 90%, and a minimum water–absorbing capacity of 1000%. The Engineer reserves the right to draw such samples and perform such tests as may be deemed necessary to assure that the material conforms to these specifications.

G. COMPOST

To be composed of well–composted leaves and free from trash or other debris and in compliance with the specifications provided by the CTDOT, Supplemental Specifications, Section M.13 Roadside Development, July 1998, M.13.06 Compost. Compost to be a minimum of 4 inches in depth.

H. SALVAGING OF PLANT MATERIALS

Salvaging of plant materials is not anticipated as part of this project.

I. TREE AND SHRUB PLANTING

Introduction of nursery stock shall be in compliance with the typical planting details for trees and shrubs as indicated.

J. PLANTING AND MULCHING OF TREES, SHRUBS, AND GROUND COVER PLANTS

The work under this item shall conform to the requirements of Section 9.49 of the CTDOT standards, supplemented and amended as follows.

1. The work under these items shall consist of furnishing, planting and mulching trees and shrubs of the type and size indicated in the planting schedule and planting plan for the detention basin transition slopes and wetlands zones. It shall also include all incidental operations, such as care of the living plants and replacement of dead and unsatisfactory plants or unsatisfactory materials before final acceptance of the contract.

2. The material for this work shall conform to the requirements of Section M.13.07. The shrubs and trees shall be as listed in the planting schedule.

3. The construction methods shall be performed in accordance with the specifications of Section 9.49.03 of the CTDOT standards except as specified in this section.

   a. *PLANTING SEASON*
   All tree, shrub and herbaceous plantings shall be performed and completed between October 1 and the date at which frozen soil conditions exist, and/or April 15 and June 15, and must begin at least one year after wetland grading and seeding, or otherwise specified by the Wetland Scientist. Plant locations shall be as generally depicted in the planting plan or as modified by the Wetland Scientist. Planting methods shall be as detailed in general planting notes above.

   b. *SETTING OF TREE AND SHRUB PLANTS*
   All tree and shrub plants shall be set at the level of the existing grade. Excavated soils from the pit shall be placed around the root ball, creating a gradual slope of at least 1.5 feet from the plant to the normal ground level. No tree or shrub plant shall be placed within an area of standing water. For each species of shrub or tree, the number of plants shall be evenly distributed on an areal basis between each planting zone area of the same type and designation, or at the discretion of the Wetland Scientist. Trees shall be planted a minimum of 15 feet from other trees or shrubs and shrubs shall be planted a minimum of 5 feet from other shrubs, or as otherwise directed by the Wetland Scientist. The species, numbers of individual plants, number of plants within zones, and sizes shall be as indicated in the Wetlands Mitigation Plan prepared by DYMAR.

   c. *REPLACEMENT OF DEAD SHRUBS AND TREES*
   The Contractor shall replace all dead trees and shrubs at the recommendation of Wetland Scientist and Project Engineer.

   - YEAR 1: Follow DOT Standards 814A Section 9.49.03.17 with the exception that the dead plants need not be removed.

   - YEARS 2&3: At the end of the second and third full growing seasons, all dead trees and shrubs will be replaced, if the total number of woody species is more than 80% of the originally identified woody plantings in the plans. Replacement shrubs may be of varying species depending upon emerging site–specific conditions and reasonable expectations of viability, with the approval of the Wetland Scientist and Project Engineer.

K. STORMWATER TREATMENT WETLAND OPERATION

1. Regular inspections of the water quality basin are required during the start up phase to insure that equal distribution of water is reaching all segments of the system. Make adjustments to the flow path as needed.

2. Regular inpsections are required for the first two years of operation to insure the system is not short–circuiting.

3. Shrubs and trees are to be removed from the bottom of the basin. Removal of invasive species shall be hand pulled annually and disposed of properly. Weeding of other herbaceous plants is not necessary.

4. Pesticides and herbicides are not to be used in the basin or on the adjacent slope areas of the basin.

5. The forebays and micro–pools, if provided, shall be cleaned when accumulated sediment reaches 50% of the depth of the pools.

L. MONITORING PLAN

1. For each of the first three full growing seasons following construction of the water quality basin / wetland, the site will be monitored and monitoring reports will be submitted to the Southbury Inland Wetlands Commission no later than December 15 of the year being monitored. The first year of monitoring will be the first year that the site has been through a full growing season after completion of construction and any required plantings. For these special conditions, a "growing season" starts no later than May 31.

2. Dead or diseased plants will be noted and recommendations for replacement provided. The development of the wetland, plant survival and presence of invasive species will be indicated in the report. At the end of three growing seasons, a final report will be filed with the Commission summarizing the successes and failures of basin development and providing recommendations to improve upon future designs and construction.

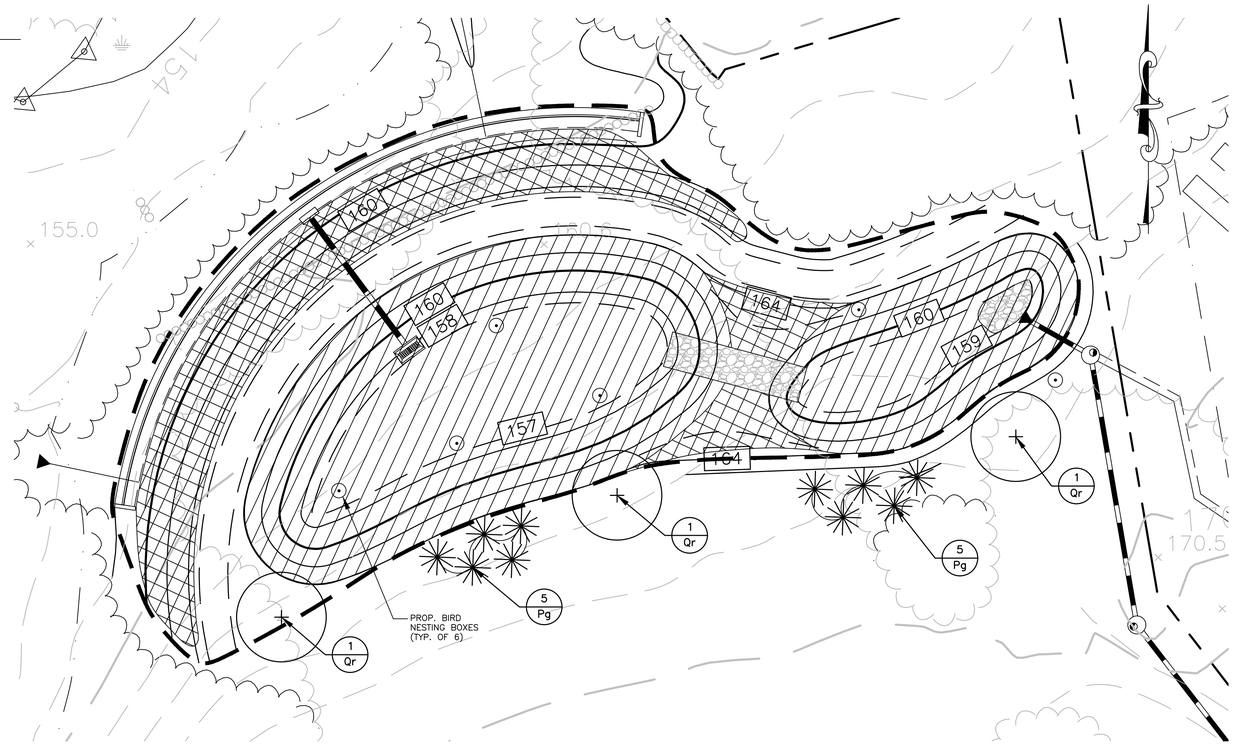

DETENTION BASIN

SCALE: 1"=20'

TREE AND SHRUB PLANTING LIST					
KEY	COMMON NAME	BOTANICAL NAME	QUAN.	SIZE	REMARKS
Pg	WHITE SPRUCE	Picea glauca	10	6'–7' HT, 15' O.C.	B&B
Qr	NORTHERN RED OAK	Quercus rubra	3	2 – 2–1/2", Cal.	B&B

NOTE: PLANT LOCATIONS CAN VARY BASED ON FIELD CONDITIONS.

PROPOSED MEADOW SEED MIXES

NEW ENGLAND CONSERVATION/ SHOWY WILDLIFE MIX

NEW ENGLAND EROSION CONTROL/RESTORATION MIX

NOTES:
1. ALL OTHER DISTURBED AREAS TO BE SEEDED WITH A MIXTURE OF CREEPING RED FESCUE (20 LBS/AC), REDTOP (2 LBS/AC), AND PERENNIAL RYE GRASS (20 LBS/AC)
2. ALL SLOPES TO BE PROVIDED WITH A BIODEGRADABLE EROSION BLANKET OR SEED MIXTURE BLEND APPLIED WITH SPRAY ON BONDED FIBER MATERIAL WITH TACKIFIER.

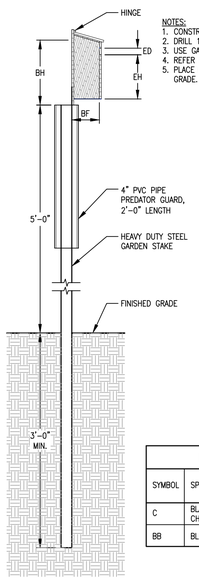

NOTES:
1. CONSTRUCT BOX WITH 3/4" RED CEDAR.
2. DRILL 1/4" HOLES IN BOTTOM FOR DRAINAGE.
3. USE GALVANIZED SCREWS & HINGES.
4. REFER TO NEST BOX SECTION FOR MEASUREMENTS.
5. PLACE BOXES 4 1/2' TO 5 1/2' ABOVE FINISH GRADE.

BIRD NESTING BOX DIMENSIONS					
SYMBOL	SPECIES	BOX FLOOR (BF)	BOX HEIGHT (BH)	ENTRANCE HEIGHT (BH)	ENTRANCE DIAMTER(BH)
C	BLACK–CAPPED CHICKADEES	4"x4"	8'–10"	6"–8"	1–1/8"
BB	BLUEBIRD	4"x4"	9"	6"	1–1/2"

LND 600

BIRD NESTING BOX DETAIL

N.T.S.

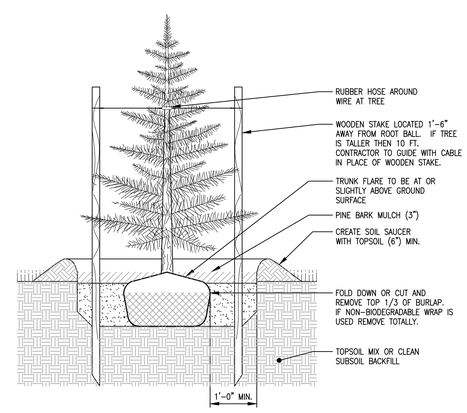

LND 131A

EVERGREEN TREE PLANTING DETAIL

N.T.S.

NOTE:
1. THE CONTRACTOR SHALL NOTIFY "CALL BEFORE YOU DIG" AT LEAST 72 HOURS PRIOR TO THE START OF EXCAVATION, BY CALLING 1–800–922–4455.

REVISION				
NO.	DATE	DESCRIPTION	DRAWN BY	CHECKED BY

COPYRIGHT © 2020 THESE PLANS ARE THE PROPERTY OF DYMAR, PREPARED AS AN INSTRUMENT OF SERVICE. THE REPRODUCTION, IN WHOLE OR IN PART, WITHOUT PERMISSION OF DYMAR IS PROHIBITED. IT IS THE USER OF THE PROJECT. DYMAR DOES NOT GUARANTEE THESE PLANS TO REFLECT THE TRUE CONDITIONS. THE CONTRACTOR SHALL VERIFY ALL FIELD CONDITIONS AND DIMENSIONS AND IS RESPONSIBLE FOR NOTIFYING DYMAR IF A DISCREPANCY EXISTS. THERE AFTER, DYMAR SHALL WAIVE FINAL SIGN.

DYMAR
800 Main Street South · Southbury, Ct. 06488 · (203) 267–1146 · Fax (203) 267–1547
ENGINEERING · PLANNING · SURVEYING · DEVELOPMENT SERVICES

DRAWINGS TO BE USED FOR LAND USE SUBMISSIONS ONLY
NOT FOR CONSTRUCTION

CLIENT: Estate of Dina M. & James S. Belta
128 Bayberry Lane
Westport, Connecticut 06880

PROJECT: Open Space Residential Subdivision
128 Bayberry Lane
Westport, Connecticut 06880

TITLE: Detention Basin Landscape Plan

NOT VALID WITHOUT SIGNATURE AND ORIGINAL SEAL

MARK E. LANCOR, P.E. #12369

DATE:	05/14/2020
SCALE:	AS NOTED
DESIGNED BY:	M.E.L.
DRAWN BY:	C.B.B.
CHECKED BY:	M.E.L.
JOB NO.:	00934
DRAWING NO.:	C-12

F:\00934 - Bayberry Lane-Westport\Civil\Dwg\012.dwg, C12, 5/13/2020 12:22:57 PM, gerrus, AutoCAD PDF (Web and Mobile).pc3, ARCH full bleed D (24.00 x 36.00 Inches), 1:1