DRAINAGE ADDENDUM #1

BELTA SUBDIVISION
128 BAYBERRY LANE
WESTPORT, CT

Prepared For:

Estate of Dina M. & James S. Belta
128 Bayberry Lane
Westport, CT 06880

PREPARED BY:

800 Main Street South
Southbury, CT 06488
Telephone: (203) 267-1046
Fax: (203) 267-1547
E-Mail: dymar@dymarinc.com

Dated: August 27, 2020
Job #00934

DYMAR
www.dymarinc.com
800 Main Street South, Suite 132 • Southbury, CT 06488-2210
(203) 264-1046 • Fax (203) 267-1547 • dymar@dymarinc.com
ENGINEERING • PLANNING • ENVIRONMENTAL • SURVEYING SERVICES

PROJECT: Bella Subdivision	PAGE: 1
CLIENT: Bella	JOB #: 934
SUBJECT: Driveway Infiltration	DATE: 8/27/20
DONE BY: SAL	CHECKED BY:

WQV Captured at Pervious Pavement Driveways

Lot #1	Pervious Area (SFT)	Void Storage (CFT)	1" Runoff Volume (CFT)	Captured Area (SFT)
3	3162	1581	381	4813
4	2799	1400	258	3259
5	2523	1262	200	2523
6	1126	563	143	1811

Void storage = $1' \times 1' \times 15''/12''_{FT} \times 0.40$ / SFT

= 0.5 CFT/SFT

1" Runoff Vol = $\frac{1''}{12} \times$ Area $\times R$ where $R = 0.5 + 0.009 \times 100\% = 0.95$

= $\frac{1''}{FT}$ 0.0792 x Area

DYMAR
www.dymarinc.com
800 Main Street South, Suite 132 • Southbury, CT 06488-2210
(203) 264-1046 • Fax (203) 267-1547 • dymar@dymarinc.com
ENGINEERING • PLANNING • ENVIRONMENTAL • SURVEYING SERVICES

PROJECT: BELLA SUBDIVISION PAGE: 2
CLIENT: BELLA JOB #: 934
SUBJECT: WQV FOR CB #4, #5 DATE: 8/27/20
DONE BY: SAL CHECKED BY:

WQV TREATMENT FOR CB #4, #5

DA = 16428 SFT. I

% imp. = 12230 / 16428 x 100 %
= 74.4%

R = 0.05 + 0.009 (74%)
= 0.72

WQV = $\frac{1''}{12}$ x 16428 x 0.72

= 985.7 CFT.

WQF FOR SIZING CDS UNIT.

DA = 16428 / ~~640~~ 43560 / 640 = 0.00059 sq mi.

CN = ~~0.30 x~~ (4198 x 80 + 12230 x 98) / 16428

= 93.4

$R_{q/p}$ = 0.151 → q = 630

WQF = q_u x DA x R

= 630 x 0.00059 x 0.72

= 0.27 CFS.

MIN. CDS. USE 2015-4 ~~FOR~~ WITH FLOW RATE OF 1.4 CFS AND 2' SUMP OR 25 CFT. CAP.

(CLEAN OUT PERIODIC BASIS TBD)

UNIT SPECIFICATION:

1. ALL UNITS SHALL BE CDS AS SPECIFIED ON PLANS AND MANUFACTURED BY CDS TECHNOLOGIES, WINTER PARK, FL, PHONE 1-800-848-9955.

GENERAL NOTES:

1. CDS UNIT SHALL BE DELIVERED WITH FIBERGLASS INLET/OIL BAFFLE & SCREEN ASSEMBLY PRE-INSTALLED. FOR FIELD ASSEMBLY OF INTERNAL COMPONENTS, THE GREEN SCREEN CYLINDER FLANGE SHALL FACE UP.
2. CONTRACTOR TO CONTACT MANUFACTURER'S TECHNICAL REPRESENTATIVE TO COORDINATE PROPER SITE INSTALLATION OF ALL CDS UNITS. SHOP DRAWINGS SHALL BE SUBMITTED TO THE ENGINEER FOR REVIEW. GREEN SCREEN CYLINDER FLANGE SHALL FACE UP.

CONSTRUCTION NOTES:

1. APPLY BUTYL MASTIC AND/OR GROUT TO SEAL JOINTS OF MANHOLE STRUCTURE. APPLY LOAD TO MASTIC SEAL IN JOINTS OF MANHOLE SECTIONS TO COMPRESS SEALANT IF NECESSARY. UNIT MUST BE WATER TIGHT UP TO FLOWLINE INVERT. (MINIMUM).
2. BEFORE PLACING MORE PRECAST COMPONENTS OR BACKFILLING, ENSURE 24" FROM THE TOP OF THE SEPARATION SLAB TO PIPE INVERT.
3. SYSTEM TO INCLUDE FIBERGLASS SUMP INSERT. CONTRACTOR TO PLACE STAINLESS STEEL SCREEN CYLINDER WITH THE CORRECT ORIENTATION (GREEN PAINTED FLANGE SHALL FACE UP & RED PAINTED FLANGE SHALL FACE DOWN) OVER THE SUMP OPENING & MATCH-DRILL FOUR (4) 9/18" DIAMETER HOLES THRU SCREEN FLANGE & TOP OF SUMP INSERT. BOLT SCREEN CYLINDER TO SUMP INSERT WITH PROVIDED 1/2" BOLTS & LOCKING HARDWARE.
4. ENSURE THAT STAINLESS STEEL SCREEN CYLINDER IS PROPERLY ORIENTED (GREEN PAINTED FLANGE SHALL FACE UP WITH RED PAINTED FLANGE SHALL FACE DOWN). MATCH-DRILL FOUR (4) 9/18" DIAMETER HOLES THRU SCREEN & CDS INLET FLANGES & BOLT TOGETHER WITH PROVIDED 1/2" BOLTS & LOCKING HARDWARE.
5. WHERE CDS UNIT IS TO HAVE PIPE INLET(S) ENTERING THRU SIDE OF MANHOLE, MARK & TRIM AWAY THE INLET FLANGE WHERE FIBERGLASS MATERIAL BLOCKS THE PIPE ENTRANCE (IF APPLICABLE).
6. PLACE SEPARATION SCREEN & FIBERGLASS INLET/BAFFLE ASSEMBLY (7 SUMP INSERT, IF APPLICABLE) IN MANHOLE & POSITION WITH INLET FLANGE AGAINST THE INSIDE WALL (ROTATE TO MATCH OPENINGS IN FLANGE WITH PIPE ORIFICE AS NEEDED); GAP BETWEEN FIBER GLASS INLET FLANGE & MANHOLE WALL WITH WATER-STOP SEALANT AS NEEDED.
7. GROUT OR USE FLEXIBLE GASKETING TO SEAL OUTLET (& INLET IF APPLICABLE) PIPE CONNECTION(S).
8. USE GRADE RINGS, BLOCKS AND/OR GROUT TO MATCH FINISHED GRADE - SEAL AS REQUIRED.

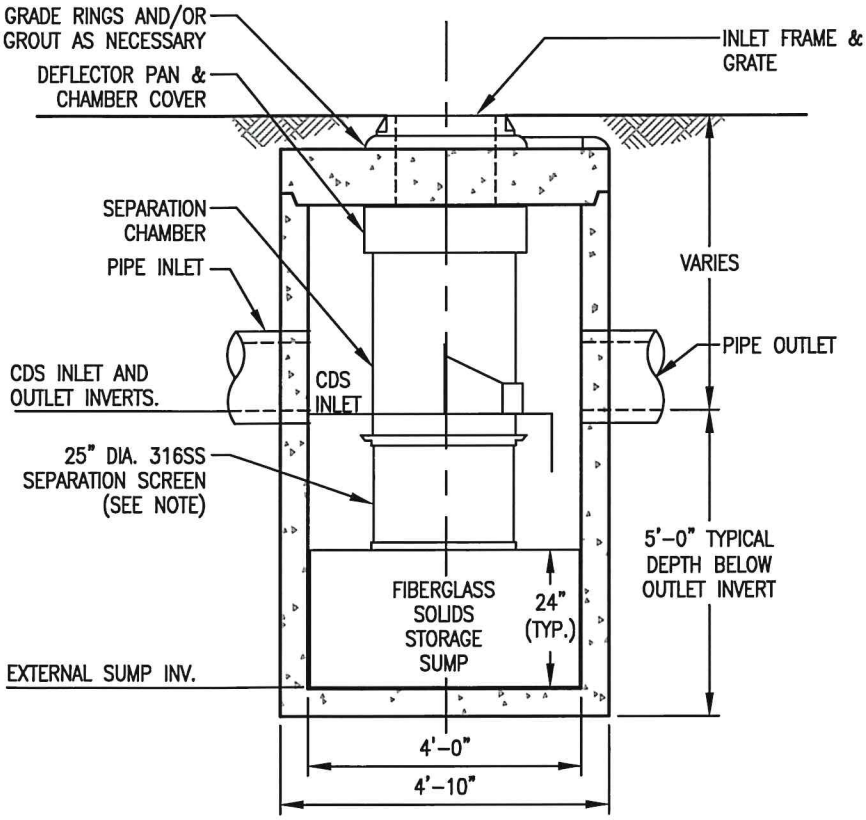

STRM 314

TYPICAL CDS STORMWATER TREATMENT CHAMBER

N.T.S.

DYMAR
325 Main Street South · Southbury, CT. 06488 · (203) 267-1846 · Fax (203) 267-1547
ENGINEERING · PLANNING · SURVEYING · DEVELOPMENT SERVICES

ITEMS TO BE COMPLETED BEFORE DETAIL IS APPROVED					REVISIONS
CONVERT PLOT STYLE *		1/2" BETWEEN TITLE & SUB-TITLE		APPROVED	
VERIFY ORIGIN *		ALIGN NOTES @ LEFT EDGE		BY:	
CORRECT TEXT STYLES		PROPER GAP AT DIMENSION LEADERS			
UPDATE DIMENSION STYLE		BREAK NOTE LEADERS THAT CROSS DIMENSION LINES			
RE-READ ALL TEXT *		MULTILINE NOTES AS MTEXT		DATE:	
CHECK LINE WEIGHTS		SEND HATCH LAYER TO BACK			
ALIGN CENTER LINES		PURGE ALL UNUSED LAYER, LINETYPES, BLOCKS, ECT. *			

Custom1 Report

Stormwater Studio 2020 v 3.0.0.20

CHANGE FROM 8/17 SUBMISSION

Project Name: Enter Project Name...

08-27-2020

Line No.	Line No.	n-value Pipe	Junct Type	Line Size (in)	Line Slope (ft/ft)	Capac. Full (cfs)	Known Q (cfs)	Q Bypass (cfs)	Q Capt (cfs)	Q Carry (cfs)	Q Total (cfs)	Flow Rate (cfs)	HGL Dn (ft)	HGL Up (ft)	HGL Junct (ft)	Invert Dn (ft)	Invert Up (ft)	Vel Ave (ft/s)	
1	1	0.012	MH	15	0.0114	7.46	0.00	....	....	....	....	7.04	160.25	160.44*	160.59	159.00	159.25	5.79	
2	2	0.012	MH	15	0.0218	10.33	0.00	....	....	....	....	7.04	162.69	164.61	164.61	161.88	163.55	7.36	
3	3	0.012	MH	15	0.019	9.63	0.00	....	....	....	....	7.04	164.93*	170.96	170.96	163.65	169.90	6.04	
4	4	0.012	MH	15	0.0131	8.00	0.00	....	....	....	....	7.04	171.28*	172.96	172.96	170.00	171.90	6.04	
5	5	0.012	MH	15	0.0054	5.14	0.10	....	....	....	....	4.69	173.45*	174.13*	174.18	172.00	172.90	3.83	
6	6	0.012	Comb.	15	0.0065	5.64	0.53	0.07	0.78	0.32	0.85	4.59	174.37*	175.51	175.66	173.00	174.64	4.37	
7	7	0.012	Comb.	15	0.0149	8.55	1.57	0.32	1.25	0.00	1.57	4.06	175.70	176.11	176.11	175.00	175.30	5.28	
8	8	0.012	Comb.	15	0.016	8.84	2.35	0.64	1.71	0.00	2.35	2.35	173.55*	174.49	174.49	171.90	173.88	2.92	
9	9	0.012	Grate	12	0.0093	3.72	0.58	0.00	0.58	0.00	0.58	2.49	176.17	176.87	176.87	175.55	176.20	4.68	
10	10	0.012	Grate	12	0.0062	3.03	1.91	0.00	1.91	0.00	1.91	1.91	177.11	177.73	177.73	176.20	177.14	3.27	

Notes: IDF File = WestportCT.idf, Return Period = 2-yrs.

Project File: Private Road.sws

TABLE 4 (Submitted 8/21/220)

COMPARISON OF PRE- AND POST-DEVELOPMENT DRAINAGE ESTIMATES

Pt. No. Design Storm	A.P. #1 Pre- (cfs)	Post- (cfs)	Diff. (%)	Basin WSE (Ft.)
2-YR	15.8	15.43	-2.5	159.29
5-YR	25.5	23.30	-8.6	160.56
10-YR	34.0	29.92	-11.9	161.64
25-YR	46.0	39.07	-15.1	163.02
50-YR	55.2	52.91	-4.1	163.40
100-YR	65.1	60.75	-6.6	164.03

Pt. No. Design Storm	A.P. #2 Pre- (cfs)	Post- (cfs)	Diff. (%)
2-YR	8.4	5.7	-31.5
5-YR	12.6	8.4	-33.7
10-YR	16.2	10.6	-34.8
25-YR	21.3	13.7	-35.7
50-YR	25.0	15.9	-36.3
100-YR	29.1	18.4	-36.8

TABLE 4 (Rev 8/227/2020)

COMPARISON OF PRE- AND POST-DEVELOPMENT DRAINAGE ESTIMATES

Pt. No. Design Storm	A.P. #1 Pre- (cfs)	Post- (cfs)	Diff. (%)	Basin WSE (Ft.)
2-YR	15.8	15.49	-2.1	159.35
5-YR	25.5	23.35	-8.4	160.62
10-YR	34.0	29.96	-11.8	161.71
25-YR	46.0	39.11	-15.0	163.05
50-YR	55.2	53.18	-3.6	163.43
100-YR	65.1	60.81	-6.5	164.06

Pt. No. Design Storm	A.P. #2 Pre- (cfs)	Post- (cfs)	Diff. (%)
2-YR	8.4	5.7	-31.5
5-YR	12.6	8.4	-33.7
10-YR	16.2	10.6	-34.8
25-YR	21.3	13.7	-35.7
50-YR	25.0	15.9	-36.3
100-YR	29.1	18.4	-36.8

Basin Model

Hydrology Studio v 3.0.0.16

Project Name: Belta Final Rev

08-28-2020

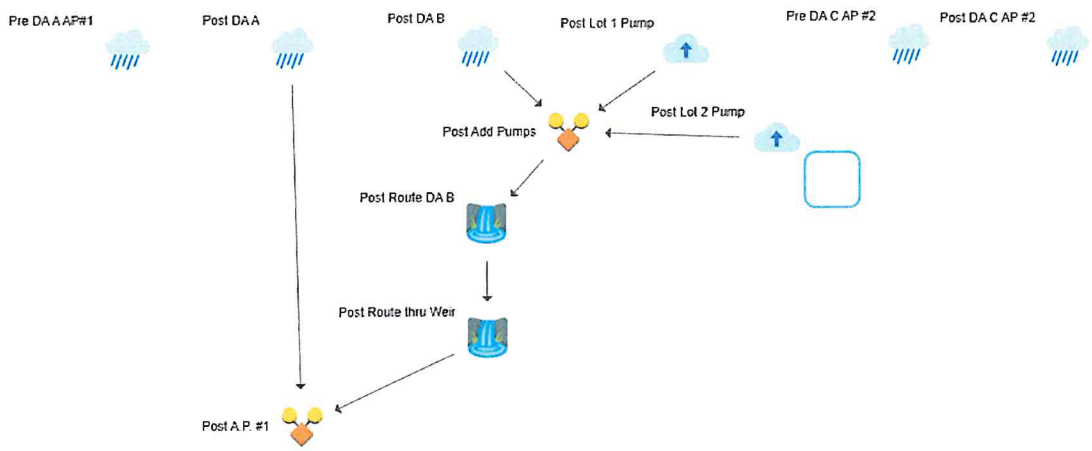

Hydrograph by Return Period

Project Name: Belta Final Rev

Hydrology Studio v 3.0.0.16

08-28-2020

Hyd. No.	Hydrograph Type	Hydrograph Name	Peak Outflow (cfs)							
			1-yr	2-yr	3-yr	5-yr	10-yr	25-yr	50-yr	100-yr
1	NRCS Runoff	Pre DA A AP#1		15.83		25.50	33.96	46.03	55.19	65.07
2	NRCS Runoff	Post DA A		11.42		18.08	23.87	32.07	38.28	44.97
3	NRCS Runoff	Post DA B		8.699		12.90	16.45	21.38	25.05	28.96
4	Manual	Post Lot 1 Pump		0.050		0.050	0.050	0.050	0.050	0.050
5	Manual	Post Lot 2 Pump		0.050		0.050	0.050	0.050	0.050	0.050
6	Junction	Post Add Pumps		8.799		13.00	16.55	21.48	25.15	29.06
7	Pond Route	Post Route DA B		4.177		5.470	6.380	8.382	15.23	16.04
8	Pond Route	Post Route thru Weir		4.177		5.470	6.380	8.387	15.24	16.04
9	Junction	Post A.P. #1		15.49		23.35	29.96	39.11	53.18	60.81
10	NRCS Runoff	Pre DA C AP #2		8.374		12.63	16.24	21.26	25.04	29.08
11	NRCS Runoff	Post DA C AP #2		5.741		8.379	10.59	13.66	15.94	18.38

Hydrograph 2-yr Summary

Project Name: Belta Final Rev

Hydrology Studio v 3.0.0.16

08-28-2020

Hyd. No.	Hydrograph Type	Hydrograph Name	Peak Flow (cfs)	Time to Peak (hrs)	Hydrograph Volume (cuft)	Inflow Hyd(s)	Maximum Elevation (ft)	Maximum Storage (cuft)
1	NRCS Runoff	Pre DA A AP#1	15.83	12.48	97,735	----		
2	NRCS Runoff	Post DA A	11.42	12.57	77,414	----		
3	NRCS Runoff	Post DA B	8.699	12.33	44,217	----		
4	Manual	Post Lot 1 Pump	0.050	0.02	8,637	----		
5	Manual	Post Lot 2 Pump	0.050	0.02	8,637	----		
6	Junction	Post Add Pumps	8.799	12.33	61,491	3, 4, 5		
7	Pond Route	Post Route DA B	4.177	12.72	60,819	6	159.35	13,579
8	Pond Route	Post Route thru Weir	4.177	12.73	60,575	7	158.05	1,958
9	Junction	Post A.P. #1	15.49	12.60	137,989	2, 8		
10	NRCS Runoff	Pre DA C AP #2	8.374	12.08	25,839	----		
11	NRCS Runoff	Post DA C AP #2	5.741	12.08	17,688	----		

Hydrograph 5-yr Summary

Project Name: Belta Final Rev

Hydrology Studio v 3.0.0.16

08-28-2020

Hyd. No.	Hydrograph Type	Hydrograph Name	Peak Flow (cfs)	Time to Peak (hrs)	Hydrograph Volume (cuft)	Inflow Hyd(s)	Maximum Elevation (ft)	Maximum Storage (cuft)
1	NRCS Runoff	Pre DA A AP#1	25.50	12.47	154,175	----		
2	NRCS Runoff	Post DA A	18.08	12.55	120,495	----		
3	NRCS Runoff	Post DA B	12.90	12.32	65,535	----		
4	Manual	Post Lot 1 Pump	0.050	0.02	8,637	----		
5	Manual	Post Lot 2 Pump	0.050	0.02	8,637	----		
6	Junction	Post Add Pumps	13.00	12.32	82,809	3, 4, 5		
7	Pond Route	Post Route DA B	5.470	12.75	82,136	6	160.62	20,822
8	Pond Route	Post Route thru Weir	5.470	12.75	81,892	7	158.04	1,966
9	Junction	Post A.P. #1	23.35	12.58	202,387	2, 8		
10	NRCS Runoff	Pre DA C AP #2	12.63	12.08	38,928	----		
11	NRCS Runoff	Post DA C AP #2	8.379	12.08	25,973	----		

Hydrograph 10-yr Summary

Project Name: Belta Final Rev

Hydrology Studio v 3.0.0.16

08-28-2020

Hyd. No.	Hydrograph Type	Hydrograph Name	Peak Flow (cfs)	Time to Peak (hrs)	Hydrograph Volume (cuft)	Inflow Hyd(s)	Maximum Elevation (ft)	Maximum Storage (cuft)
1	NRCS Runoff	Pre DA A AP#1	33.96	12.47	204,145	----		
2	NRCS Runoff	Post DA A	23.87	12.55	158,388	----		
3	NRCS Runoff	Post DA B	16.45	12.32	83,853	----		
4	Manual	Post Lot 1 Pump	0.050	0.02	8,637	----		
5	Manual	Post Lot 2 Pump	0.050	0.02	8,637	----		
6	Junction	Post Add Pumps	16.55	12.32	101,127	3, 4, 5		
7	Pond Route	Post Route DA B	6.380	12.77	100,454	6	161.71	27,575
8	Pond Route	Post Route thru Weir	6.380	12.77	100,210	7	158.04	1,972
9	Junction	Post A.P. #1	29.96	12.57	258,599	2, 8		
10	NRCS Runoff	Pre DA C AP #2	16.24	12.08	50,262	----		
11	NRCS Runoff	Post DA C AP #2	10.59	12.08	33,063	----		

Hydrograph 25-yr Summary

Project Name: Belta Final Rev

Hydrology Studio v 3.0.0.16

08-28-2020

Hyd. No.	Hydrograph Type	Hydrograph Name	Peak Flow (cfs)	Time to Peak (hrs)	Hydrograph Volume (cuft)	Inflow Hyd(s)	Maximum Elevation (ft)	Maximum Storage (cuft)
1	NRCS Runoff	Pre DA A AP#1	46.03	12.45	276,258	----		
2	NRCS Runoff	Post DA A	32.07	12.53	212,822	----		
3	NRCS Runoff	Post DA B	21.38	12.32	109,741	----		
4	Manual	Post Lot 1 Pump	0.050	0.02	8,637	----		
5	Manual	Post Lot 2 Pump	0.050	0.02	8,637	----		
6	Junction	Post Add Pumps	21.48	12.32	127,015	3, 4, 5		
7	Pond Route	Post Route DA B	8.382	12.75	126,342	6	163.05	37,446
8	Pond Route	Post Route thru Weir	8.387	12.75	126,099	7	158.05	1,984
9	Junction	Post A.P. #1	39.11	12.55	338,920	2, 8		
10	NRCS Runoff	Pre DA C AP #2	21.26	12.08	66,364	----		
11	NRCS Runoff	Post DA C AP #2	13.66	12.07	43,054	----		

Hydrograph 50-yr Summary

Project Name: Belta Final Rev

Hydrology Studio v 3.0.0.16

08-28-2020

Hyd. No.	Hydrograph Type	Hydrograph Name	Peak Flow (cfs)	Time to Peak (hrs)	Hydrograph Volume (cuft)	Inflow Hyd(s)	Maximum Elevation (ft)	Maximum Storage (cuft)
1	NRCS Runoff	Pre DA A AP#1	55.19	12.45	331,657	----		
2	NRCS Runoff	Post DA A	38.28	12.53	254,499	----		
3	NRCS Runoff	Post DA B	25.05	12.32	129,336	----		
4	Manual	Post Lot 1 Pump	0.050	0.02	8,637	----		
5	Manual	Post Lot 2 Pump	0.050	0.02	8,637	----		
6	Junction	Post Add Pumps	25.15	12.32	146,610	3, 4, 5		
7	Pond Route	Post Route DA B	15.23	12.63	145,937	6	163.43	40,270
8	Pond Route	Post Route thru Weir	15.24	12.63	145,694	7	158.08	2,016
9	Junction	Post A.P. #1	53.18	12.58	400,193	2, 8		
10	NRCS Runoff	Pre DA C AP #2	25.04	12.07	78,597	----		
11	NRCS Runoff	Post DA C AP #2	15.94	12.07	50,602	----		

Hydrograph 100-yr Summary

Project Name: Belta Final Rev

Hydrology Studio v 3.0.0.16

08-28-2020

Hyd. No.	Hydrograph Type	Hydrograph Name	Peak Flow (cfs)	Time to Peak (hrs)	Hydrograph Volume (cuft)	Inflow Hyd(s)	Maximum Elevation (ft)	Maximum Storage (cuft)
1	NRCS Runoff	Pre DA A AP#1	65.07	12.45	392,092	----		
2	NRCS Runoff	Post DA A	44.97	12.53	299,870	----		
3	NRCS Runoff	Post DA B	28.96	12.32	150,512	----		
4	Manual	Post Lot 1 Pump	0.050	0.02	8,637	----		
5	Manual	Post Lot 2 Pump	0.050	0.02	8,637	----		
6	Junction	Post Add Pumps	29.06	12.32	167,786	3, 4, 5		
7	Pond Route	Post Route DA B	16.04	12.65	167,113	6	164.06	45,222
8	Pond Route	Post Route thru Weir	16.04	12.67	166,869	7	158.08	2,020
9	Junction	Post A.P. #1	60.81	12.53	466,739	2, 8		
10	NRCS Runoff	Pre DA C AP #2	29.08	12.07	91,848	----		
11	NRCS Runoff	Post DA C AP #2	18.38	12.07	58,747	----		