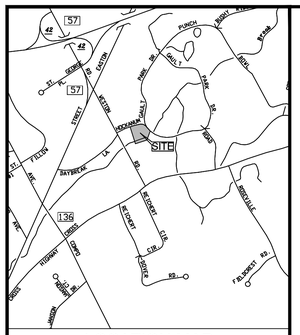

LOCATION MAP
(NTS)

GENERAL NOTES

1. LOT LINE & TOPOGRAPHIC INFORMATION FOR 4 HOCKANUM ROAD TAKEN FROM MAP OF PROPERTY PREPARED BY HAMMONS LLC DATED SEPTEMBER 10, 2007. ELEVATIONS HAVE BEEN UPDATED TO NAVD 1988 DATUM.
2. 100 YEAR FLOOD ELEVATION TAKEN FROM FLOODPLAIN MODELING FOR 4 HOCKANUM ROAD BY GZA GEOENVIRONMENTAL INC. DATED APRIL 16, 2020
3. THE WETLAND LINE SHOWN IS THE AMENDED WETLAND LINE PER APPLICATION #WWM-11017-20 APPROVED JULY 15, 2020, DELINEATED BY WILLIAM KENNY ASSOCIATES.

FLOODLINE LEGEND

- FL — EXISTING 25 YEAR FLOOD LINE EL. 44.10 PER KEITH WILBERG
- FL — PROPOSED 25 YEAR FLOOD LINE EL. 44.10 PER KEITH WILBERG
- FL — EXISTING 100 YEAR FLOOD LINE EL. 44.36
- FL — PROPOSED 100 YEAR FLOOD LINE EL. 44.36

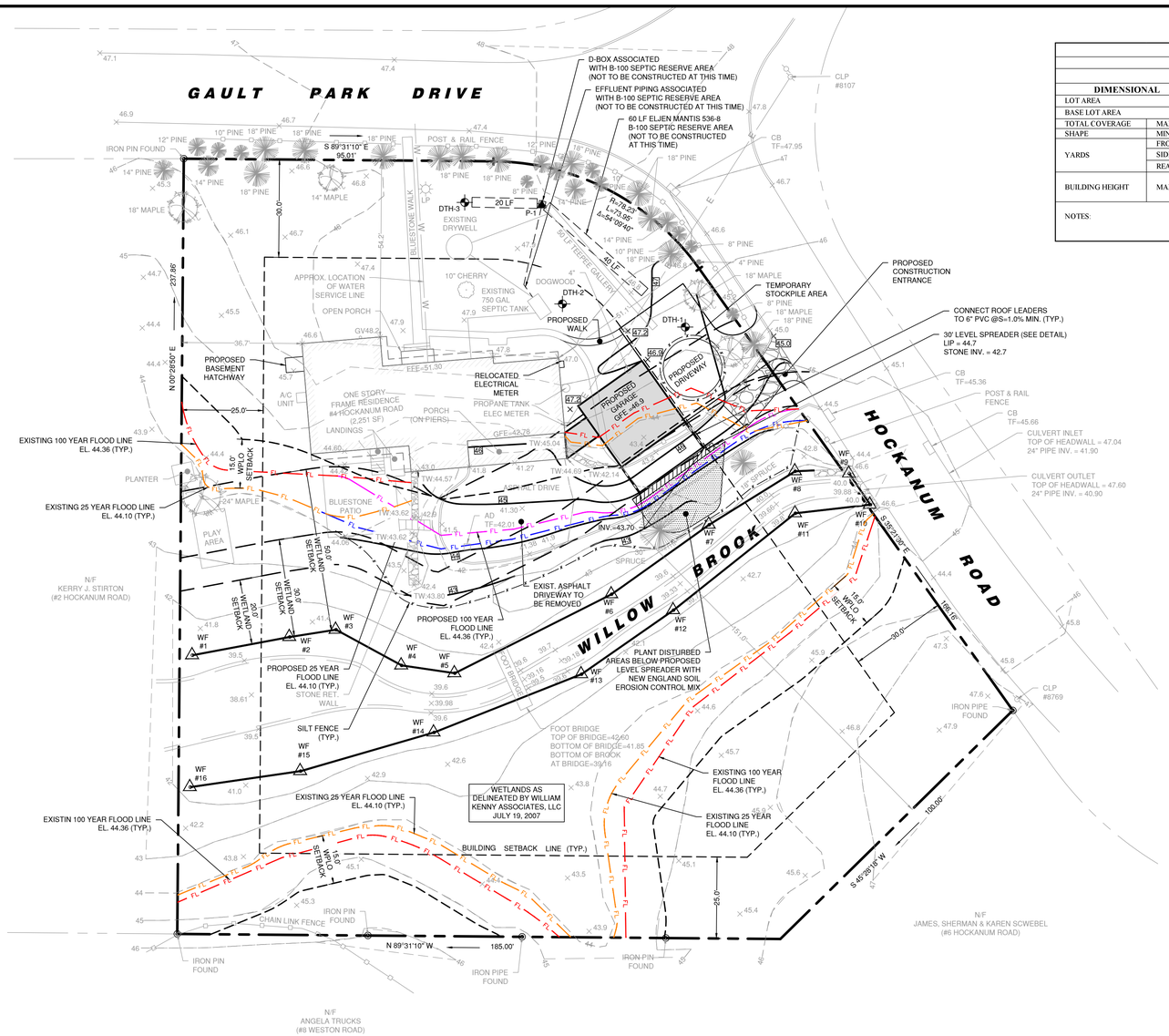

ZONING DATA

ZONING DISTRICT: RESIDENCE AA DISTRICT
PROPOSED USE: SINGLE-FAMILY RESIDENCE

DIMENSIONAL		REQUIRED/ALLOWED	EXISTING	PROVIDED	CONFORMS
LOT AREA		43,560 SF (1.0 AC.)	47,999 SF (1.10 AC.)	47,999 SF (1.10 AC.)	
BASE LOT AREA			44,009 SF (1.01 AC.)	44,009 SF (1.01 AC.)	
TOTAL COVERAGE	MAX.	25% / 11,002.25 SF	11.4% / 5,019 SF	9.7% / 4,285 SF	
SHAPE	MINIMUM	150' SQUARE	>150'	>150'	
YARDS	FRONT	30'	51.1',54.2'	30.4',54.2'	
	SIDE	25'	36.7', 151.0'	36.7', 151.0'	
	REAR	25'	N/A	N/A	
BUILDING HEIGHT	MAXIMUM	3 STORIES 40'	2 STORIES 20.6'	2 STORIES 20.6'	

NOTES:

COVERAGE CALCULATIONS

SITE: 4 HOCKANUM ROAD
ZONE: RESIDENCE AA
TOTAL SITE AREA: 1.10 AC. 47,999 S.F.

1.	TOTAL LOT AREA (GROSS)		47,999 S.F.
2.	EASEMENTS, ACCESSWAY	0	
3.	ADD'L EXCLUSIVE SURFACE EASEMENTS	0	
4.	OTHER EXCLUSIVE SURFACE EASEMENTS	0	
5.	TOTAL OF EASEMENTS & ROADS (SUM OF LINES 2, 3 & 4)		0 S.F.
6.	WETLAND AREAS	4,965 S.F	
7.	STEEP SLOPES > 25% (BASED ON TOWN GIS DATA)	22 S.F	
8.	TOTAL WETLAND & STEEP SLOPES (SUM OF LINES 6 & 7)	4,987 S.F	
9.	WETLAND/SLOPE REDUCTION	0.80 X LINE 8	3,990 S.F.
10.	DETERMINE BASE LOT AREA (LINE 1 MINUS LINES 5 AND LINE 9)		44,009 S.F.
	DETERMINE MAXIMUM ALLOWABLE LOT AREA COVERAGE		
11.	BASE LOT AREA X 25%	LINE 10 X 0.25	11,002.25 S.F.

	DETERMINE PROPOSED TOTAL AREA COVERAGE		
12	**EXISTING TOTAL COVERAGE**		
	EXISTING RESIDENCE	2,251 S.F.	
	EXISTING FRONT PORCH	39 S.F.	
	EXISTING REAR ENCLOSED PORCH	239 S.F.	
	EXISTING LANDINGS	80 S.F.	
	EXISTING EAVES >2' OFF BUILDING	122 S.F.	
	EXISTING DRIVEWAY	2,288 S.F.	
13		SUM OF LINE 12	5,019 S.F.
14	**PROPOSED TOTAL COVERAGE**		
	EXISTING RESIDENCE	2,251 S.F.	
	EXISTING FRONT PORCH	39 S.F.	
	EXISTING REAR ENCLOSED PORCH	239 S.F.	
	EXISTING LANDINGS	80 S.F.	
	EXISTING EAVES >2' OFF BUILDING	122 S.F.	
	PROPOSED GARAGE	621 S.F.	
	PROPOSED DRIVEWAY	933 S.F.	
15		SUM OF LINE 14	4,285 S.F.
16	**ALLOWABLE TOTAL COVERAGE**	25%	11,002.25 S.F.
17	**EXISTING TOTAL COVERAGE**	11.4%	5,019 S.F.
18	**PROPOSED LOT COVERAGE**	9.7%	4,285 S.F.

TEST HOLE DATA

SOIL TESTS CONDUCTED ON APRIL 21, 2020

TEST HOLE 1

0 - 19" TOPSOIL
19 - 46" ORANGE BROWN SAND & GRAVEL
46 - 77" BROWN SAND & GRAVEL
NO MOTTLING, NO LEDGE, GROUNDWATER AT 69"
RESTRICTIVE LAYER AT 69"

TEST HOLE 2

0 - 13" TOPSOIL
13 - 37" BROWN SANDY SILT
37 - 50" LIGHT BROWN CLAY LOAM
50 - 88" ORANGE BROWN SAND & GRAVEL
NO MOTTLING, NO GROUNDWATER, NO LEDGE
NO RESTRICTIVE LAYER

TEST HOLE 3

0 - 10" TOPSOIL
10 - 20" LIGHT BROWN FINE SAND
20 - 51" BROWN SILTY LOAM
51 - 102" LIGHT BROWN FINE SAND
NO MOTTLING, NO LEDGE, GROUNDWATER AT 99"
RESTRICTIVE LAYER AT 99"

PERCOLATION TEST DATA

Perc Hole P.1 Date: 4/21/2020
Depth: 24 in. Presoak: 1 Hour

Time	Depth (in.)	Drop (in.)	Interval (min.)	Rate (min./in.)
10:30	5.00			
10:40	9.00	4.00	00:10	2.50
10:50	12.00	3.00	00:10	3.33
11:00	14.00	2.00	00:10	5.00
11:10	16.00	2.00	00:10	5.00
11:20	17.75	1.75	00:10	5.71
11:30	19.00	1.25	00:10	8.00

Final Rate: 1" in 8.00 minutes

LEGEND

EXISTING SYMBOLS:

- Iron Pin (Found)
- Monument (Found)
- Manhole
- "C" Catch Basin
- Utility Pole
- Light Pole
- WG Water Gate
- GV Gas Valve
- GM Gas Meter
- (W) Existing Well

PROPOSED SYMBOLS:

- (YD) Storm Yard Drain
- (MH) Storm Drain Manhole
- (CB) Catch Basin
- (SSMH) Sanitary Sewer Manhole
- P-1 Perc Test Hole Location & Number
- DTH-1 Deep Test Hole Location & Number
- (W) Proposed Well

EXISTING LINETYPES:

- Property Line
- S Sanitary Sewer Line
- E U/G Elec. Line
- W Water Line
- O/H Overhead Utilities
- T U/G Tele. Line
- E/T U/G Electric/Telephone Line
- Wood/Chain Link Fence
- Stone Ret. Wall
- 20 Contour
- WF#3 WF#4 Wetland Limit
- 20.1 Spot Elevation
- Watercourse Limit
- Drainage Line
- TOWN LINE Town/City Line
- 25 Year Flood Line
- 100 Year Flood Line
- FL FEMA Flood Line
- Floodway Boundary
- MHW Mean High Water
- C.J. Coastal Jurisdiction Line

PROPOSED LINETYPES:

- S Sanitary Sewer
- E Electric Service
- W Water Service
- T U/G Telephone Service
- E/T Electric/Telephone Service
- Primary Septic
- Reserve Septic
- Retaining Wall
- 20 Contour (Major)
- 20.1 × Spot Elevation
- Silt Fence (GSF)
- Wood/Chain Link Fence
- Construction Fence
- Vegetative Buffer
- WF#3 WF#4 Wetland Limit (Flagged)

SCALE IN FEET
0 20 40 60

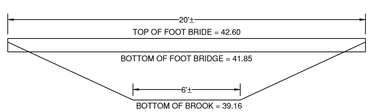

FOOT BRIDGE OPENING
(NTS)

NOT FOR CONSTRUCTION
FOR REVIEW AND APPROVAL
BY PUBLIC AGENCIES ONLY

LANDTECH

ISSUE	REVISION DATE
REVISED PER WWD COMMENTS	6/12/20

LANDTECH
Civil Engineering Site Planning
Environmental Science & Engineering
Surveying & Engineering Land Surveying
Permit Coordination & Management
Construction Management & Financing
518 Riverside Avenue • Westport, Connecticut 06880 • 203-454-2110 • info@landtechconsult.com

PREPARED FOR:
ANDREW S. & MICHELLE M. LUDEL

PROJECT LOCATION:
4 HOCKANUM ROAD
WESTPORT, CT

TITLE:
PROPOSED SITE IMPROVEMENTS TO ALLEVIATE FLOODING FOR WILLOW BROOK

PROJECT No.	19040-01
SCALE 1" = 20'	DATE 4/29/2019
DRAWN BY: SM	CHECKED BY: PR

C-1

T:\ACTIVE PROJECTS\19040-01 LUDEL - 4 HOCKANUM ROAD, WESTPORT\DRAWINGS\4 HOCKANUM ROAD - SITE PLAN.DWG

LANDTECH

GENERAL EROSION AND SEDIMENT CONTROL NOTES

1. LAND DISTURBANCE WILL BE KEPT TO A MINIMUM; RESTABILIZATION WILL BE SCHEDULED AS SOON AS POSSIBLE.
2. SILT FENCE WILL BE INSTALLED ALONG THE TOE OF ALL CRITICAL CUT AND FILL SLOPES, SOIL STOCKPILE AREAS, AND IN THOSE AREAS SHOWN ON THE PLAN.
3. ALL EROSION AND SEDIMENT CONTROL MEASURES WILL BE CONSTRUCTED IN ACCORDANCE WITH THE STANDARDS AND SPECIFICATIONS OF THE STATE OF CONNECTICUT GUIDELINES FOR SOIL EROSION AND SEDIMENT CONTROL. 2002.
4. EROSION AND SEDIMENT CONTROL MEASURES WILL BE INSTALLED PRIOR TO LAND DISTURBANCE WHENEVER POSSIBLE.
5. ALL TEMPORARY EROSION AND SEDIMENTATION CONTROL MEASURES SHALL BE PROPERLY MAINTAINED UNTIL STABILIZATION HAS BEEN ACHIEVED.
6. ADDITIONAL CONTROL MEASURES WILL BE INSTALLED DURING THE CONSTRUCTION PERIOD IF NECESSARY OR REQUIRED. A MINIMUM OF 50 FEET OF SILT FENCE SHALL BE STORED AT THE SITE FOR EMERGENCY USE.
7. ANY EXCAVATIONS THAT MUST BE DEWATERED WILL BE PUMPED INTO AN ACTIVE DRAINAGE SYSTEM OR DISPERSED IN AN UNDISTURBED FIELD AREA. THE INLETS OF ALL PUMPS ARE TO BE FLOATED A MINIMUM OF 24 INCHES OFF THE BOTTOM OF THE EXCAVATION.
8. WATER AND CALCIUM CHLORIDE SHALL BE APPLIED TO UNPAVED ACCESSWAYS TO PREVENT WIND GENERATED SEDIMENTS AND DUST.
9. DEBRIS AND OTHER WASTES RESULTING FROM EQUIPMENT MAINTENANCE AND CONSTRUCTION ACTIVITIES WILL NOT BE DISCARDED ON-SITE.
10. SEDIMENT REMOVED FROM CONTROL STRUCTURES WILL BE DISPOSED OF IN A MANNER WHICH IS CONSISTENT WITH INTENT OF THE PLAN.
11. SILT FENCES SHALL HAVE SEDIMENT REMOVED WHEN THE DEPTH OF THE SEDIMENT IS EQUAL TO ⅓ TO ½ THE HEIGHT OF THE FENCE. FENCES SHALL BE PROPERLY INSTALLED AND RIPPED FENCE OR BROKEN POSTS REPAIRED AS SOON AS PRACTICAL.
12. ANTI-TRACKING PADS AND GRAVEL CHECK DAMS SHALL BE REPLACED WHEN VOID SPACES ARE FULL OR STRUCTURES ARE BREACHED, AS APPLICABLE.
13. TEMPORARY EROSION CONTROL MEASURES SHALL BE REMOVED AND THE SOIL SURFACE STABILIZED WHEN CONSTRUCTION IS COMPLETE AND THE SOIL SURFACES ARE PERMANENTLY STABILIZED. STRUCTURAL COMPONENTS SHALL BE CLEANED OF ALL SEDIMENT UPON COMPLETION OF CONSTRUCTION.
14. THE OWNER IS ASSIGNED THE RESPONSIBILITY FOR IMPLEMENTING THIS EROSION AND SEDIMENT CONTROL PLAN. THIS RESPONSIBILITY INCLUDES INSTALLATION AND MAINTENANCE OF CONTROL MEASURES. INFORMING ALL PARTIES ENGAGED ON THE CONSTRUCTION SITE OF THE REQUIREMENTS AND OBJECTIVES OF THE PLAN, NOTIFYING THE PLANNING AND ZONING COMMISSION OF ANY TRANSFER OF THIS RESPONSIBILITY, AND FOR CONVEYING A COPY OF THE EROSION AND SEDIMENT PLAN IF AND WHEN THE TITLE OF LAND IS TRANSFERRED.

EXCAVATION/FILL NOTES:

1. NO PROCESSING OF EARTH OF ANY KIND SHALL BE CONDUCTED ON THE SITE EXCEPT FOR MATERIAL THAT IS EXCAVATED DIRECTLY FROM THE PROJECT SITE FOR USE ON THE PROJECT SITE.
2. THERE SHALL BE NO SHARP DECLIVITIES, PITS OR DEPRESSIONS.
3. PROPER SURFACE DRAINAGE SHALL BE PROVIDED AND GROUNDWATER SHALL NOT BE POLLUTED.
4. AFTER EXCAVATION OR FILLING, THE PREMISES SHALL BE CLEARED OF DEBRIS AND TEMPORARY STRUCTURES WITHIN THE TIME PROVIDED IN THE PERMIT.
5. FILL MATERIAL SHALL NOT INCLUDE ORGANIC (FOR EXAMPLE TREE STUMPS, LEAVES, BRUSH OR OTHER MATERIALS THAT DECOMPOSE, ETC.) OR PETROLEUM BASED PRODUCTS OR MATERIALS.
6. MAXIMUM CUT/FILL:

BASE LOT AREA (SQUARE FEET) X 50% OF THE ALLOWABLE TOTAL COVERAGE PERCENTAGE IN RESPECTIVE ZONE X 10' DIVIDED BY 27 CUBIC FEET =

44,009 SF X (0.5 X 25%) X 10 / 27 = 1,018.73 CY

PROPOSED FILL: 450 CY
PROPOSED CUT: 10 CY
TOTAL EARTHWORK: 460 CY << 1,018.73 CY

CODE COMPLYING NOTES

1. THERE HAVE BEEN NO OBSERVED SEWERAGE BREAKOUTS FOR THE EXISTING SEPTIC SYSTEM.
2. THE EXISTING SEPTIC SYSTEM HAS BEEN INSPECTED PRIOR TO ISSUANCE OF CERTIFICATION OF OCCUPANCY FOR THE PROPOSED POOL.
3. EXISTING SEPTIC SYSTEM LOCATION TAKEN FROM INFORMATION ON FILE WITH THE WESTPORT WESTON HEALTH DEPARTMENT.
4. THE PURPOSE OF THIS PLAN IS TO DEMONSTRATE THAT A CODE COMPLYING SEPTIC SYSTEM AREA IS AVAILABLE ON THE PROPERTY TO ACCOMMODATE A PROPOSED BUILDING ADDITION IN ACCORDANCE WITH SECTION 19-13-B100A OF THE CONNECTICUT PUBLIC HEALTH CODE. AN ENGINEERED SEPTIC SYSTEM DESIGN WILL BE REQUIRED AT THE TIME OF SEPTIC SYSTEM REPLACEMENT IF NEEDED IN THE FUTURE.
5. BASED ON A VISUAL INSPECTION OF NEIGHBORING PROPERTIES AND A REVIEW OF AVAILABLE RECORDS, NO PART OF THE EXISTING SEPTIC SYSTEM AND CODE COMPLYING AREA IS WITHIN THE REQUIRED SEPARATION DISTANCE FROM A WATER SUPPLY WELL, STORM WATER STRUCTURE, GROUNDWATER DRAIN, STORM WATER SYSTEM, OR CLOSED LOOP GEOTHERMAL SYSTEM BOREHOLE/TRENCH AS DEFINED IN TABLE 1 OF THE " TECHNICAL STANDARDS FOR SUBSURFACE SEWAGE DISPOSAL SYSTEMS" , LATEST REVISION.

CODE COMPLYING AREA CALCULATIONS

OF BEDROOMS = 4 (PER WESTPORT GIS)
PERCOLATION RATE = 1 INCH 8.0 MINUTES
SQUARE FEET OF LEACHING AREA REQUIRED = 577.50 SF

PROPOSED CODE COMPLYING AREA
60 LF OF ELJEN MANTIS 536-8
60 LF X 11 SF/LF = 660 SF OF LEACHING AREA PROVIDED

BASED ON THE ABSENCE OF AN OBSERVED RESTRICTIVE LAYER WITHIN 60", MLSS NEED NOT BE CONSIDERED

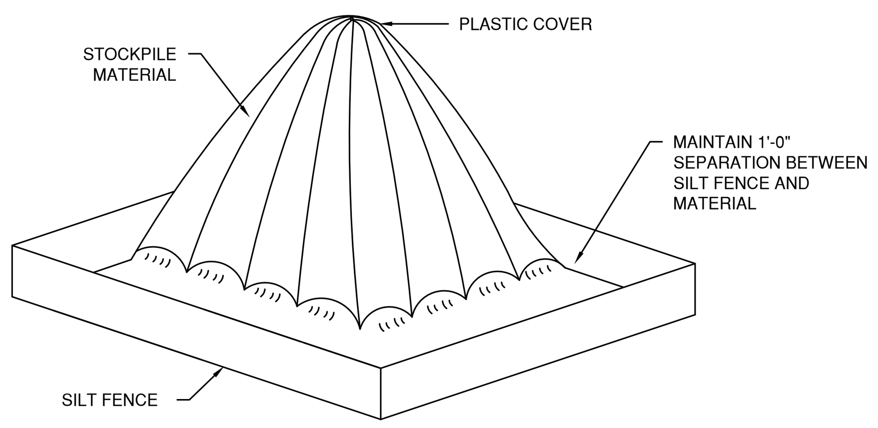

NOTE:
STOCKPILE SHALL BE COVERED ENTIRELY BY AN ANCHORED PLASTIC COVER OR SEEDED

STOCKPILE DETAIL
(NTS)

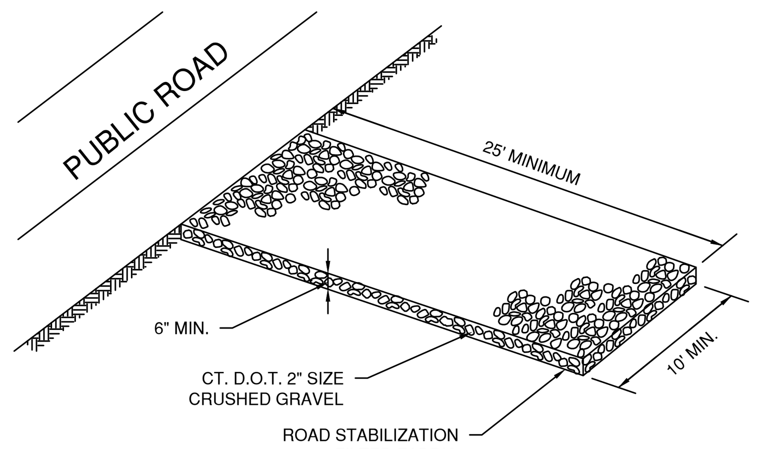

NOTE:
PLACE THE ANTI-TRACKING PAD ON THE SITE AT THE VEHICLE EXIT LOCATION SO THAT ALL VEHICLES LEAVING THE SITE MUST PASS OVER THE PAD BEFORE ENTERING THE PUBLIC ROAD

CONSTRUCTION ENTRANCE
(NTS)

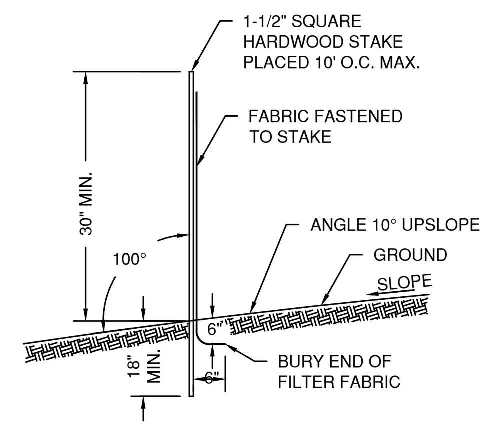

GEOTEXTILE SILT FENCE
(NTS)

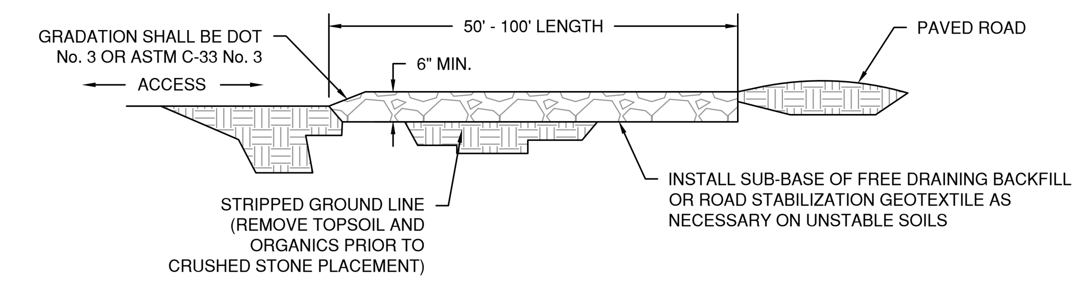

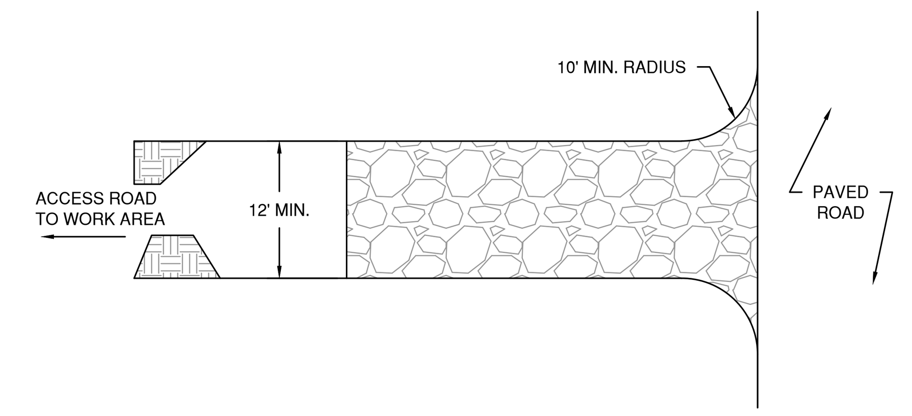

CONSTRUCTION ENTRANCE
(NTS)

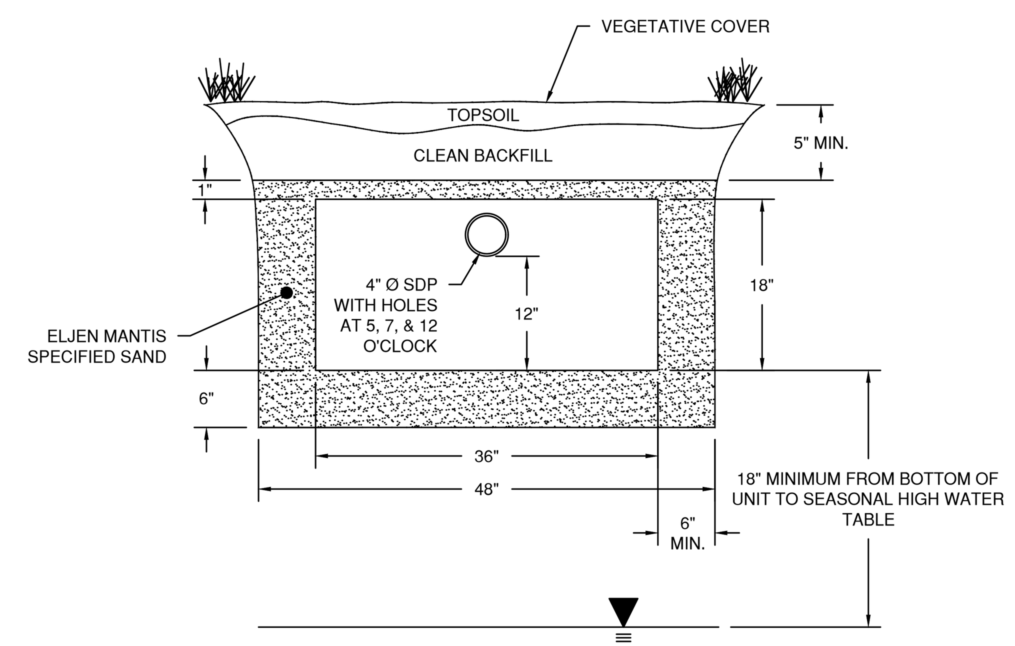

GENERAL NOTES
VENTING REQUIRED WHEN MORE THAN 18" OF COVER AS MEASURED FROM THE TOP OF THE UNIT TO FINISHED GRADE

ELJEN MANTIS 536-8 TYPICAL CROSS SECTION
(NTS)

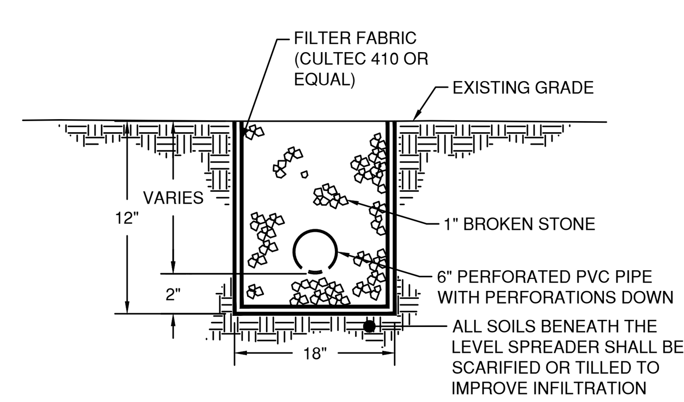

LEVEL SPREADER TYPICAL CROSS SECTION
(NTS)

GENERAL SEPTIC FEASIBILITY NOTES

1. BASED ON AN OBSERVED PERCOLATION RATE OF 1" IN LESS THAN 10.0 MINUTES AND A 4 BEDROOM DWELLING 577.50 SQ. FT. OF EFFECTIVE LEACHING AREA IS REQUIRED AS PER THE STATE OF CONNECTICUT HEALTH CODE. INSTALL 60 LINEAR FEET (60 LF OF TRENCHING) OF ELJEN MANTIS 536-8 (11 SQ. FT. PER FT.) PROVIDING 660 SQ. FT. OF EFFECTIVE LEACHING AREA.
2. HOUSE SEWER TO BE CONSTRUCTED OF 4" PVC, SCHED. 40, ASTM D1785 WITH RUBBER COMPRESSION GASKETED JOINTS OR EQUAL. MINIMUM PITCH ON HOUSE SEWER FROM HOUSE TO SEPTIC TANK TO BE ONE-QUARTER-INCH PER FOOT AND SEWER FROM SEPTIC TANK TO LEACHING SYSTEM TO BE ONE- EIGHTH PER FOOT. ALL EFFLUENT PIPES DISPERSING FLOWS TO DISTRIBUTION BOXES TO BE 4" SOLID PVC ASTM D3034 SDR 35 WITH SOLVENT SEALED JOINTS OR EQUAL. CHANGES IN DIRECTION TO BE MADE WITH THE APPROPRIATE COMMERCIALLY MANUFACTURED FITTINGS. ALL PIPES TO BE PROPERLY CONNECTED TO SEPTIC TANK, PUMP CHAMBER AND DISTRIBUTION BOXES.
3. PROVIDE A 1,500 GALLON, TWO COMPARTMENT SEPTIC TANK MADE OF CONCRETE WITH A MINIMUM 4,000 PSI CONCRETE PER ASTM STANDARDS WITH 5 TO 7 PERCENT AIR ENTRAINMENT. MANHOLES SHALL EXTEND TO FINISHED GRADE WHERE COVER OVER THE TANK EXCEEDS 12 INCHES. SEAL ALL JOINTS. ALL TANK INLET AND OUTLET PIPING SHALL BE SEALED WITH A POLYETHYLENE GASKET, "POLYLOK" OR EQUAL.
4. DISTRIBUTION BOXES ARE TO BE SET ON A STABLE FOOTING OF 12" MINIMUM DEPTH OF 1" CRUSHED STONE.
5. APPROVED AGGREGATE (STONE) SHALL BE USED FOR BACKFILLING.
6. IT IS THE RESPONSIBILITY OF THE INSTALLER TO KEEP BOTH THE ENGINEER OF RECORD AND THE LOCAL HEALTH DEPARTMENT INFORMED OF CONSTRUCTION PROGRESS.
7. THE INSTALLATION OF THE SEPTIC SYSTEM SHALL BE UNDER THE SUPERVISION OF A PROFESSIONAL ENGINEER.
8. EROSION AND SEDIMENT CONTROL MEASURES SPECIFIED IN THE PLAN SHALL BE MAINTAINED UNTIL DISTURBED AREAS HAVE BEEN STABILIZED.
9. PRIOR TO CONSTRUCTION ACTIVITIES THE LEACHING SYSTEM AREAS SHALL BE ROPED OFF OR OTHERWISE DELINEATED SO AS TO KEEP CONSTRUCTION TRAFFIC OFF THE SEPTIC AREA.
10. THE DESIGN CONFORMS TO APPLICABLE CODE AND ACCEPTED PRACTICE. NO OTHER WARRANTY IS EXPRESSED OR IMPLIED.
11. THE DISCHARGE FROM GARBAGE DISPOSALS OR WATER TREATMENT DEVICES MUST NOT BE DISCHARGED TO THE SYSTEM.
12. LANDTECH ASSUMES NO RESPONSIBILITY FOR SEPTIC SYSTEM SITE PREPARATION, LOCATION OR INVERT ELEVATIONS IN COMPLIANCE WITH THE APPROVED PLAN, UNLESS IT SUPERVISES EACH PHASE OF SYSTEM INSTALLATION.
13. IT IS THE RESPONSIBILITY OF THE INSTALLER TO CALL "CALL BEFORE YOU DIG," 1-800-922-4455, PRIOR TO ANY EXCAVATION WORK ON THE PROPERTY.
14. THERE ARE NO WELLS LOCATED WITHIN 75' OF THE PROPOSED SEPTIC SYSTEM.

NOT FOR CONSTRUCTION
FOR REVIEW AND APPROVAL
BY PUBLIC AGENCIES ONLY

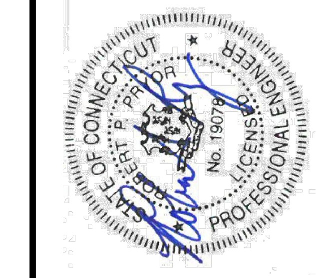

REVISION DATE	ISSUE
6/2/20	REVISED PER WWHD COMMENTS

LANDTECH
Civil & Structural Engineers
Environmental Scientists
Permit Coordination
Construction Management
Construction Finance

518 Riverside Avenue • Westport, Connecticut 06880 • 203-454-2110 • info@landtechconsult.com

PREPARED FOR:
ANDREW S. & MICHELLE M. LUDEL

PROJECT LOCATION:
4 HOCKANUM ROAD
WESTPORT, CT

TITLE:
PROPOSED SITE IMPROVEMENTS TO ALLEVIATE FLOODING FOR WILLOW BROOK - NOTES AND DETAILS

PROJECT No.	19040-01
SCALE: NTS	DATE: 4/29/2020
DRAWN BY: SM	CHECKED BY: PR

C-2