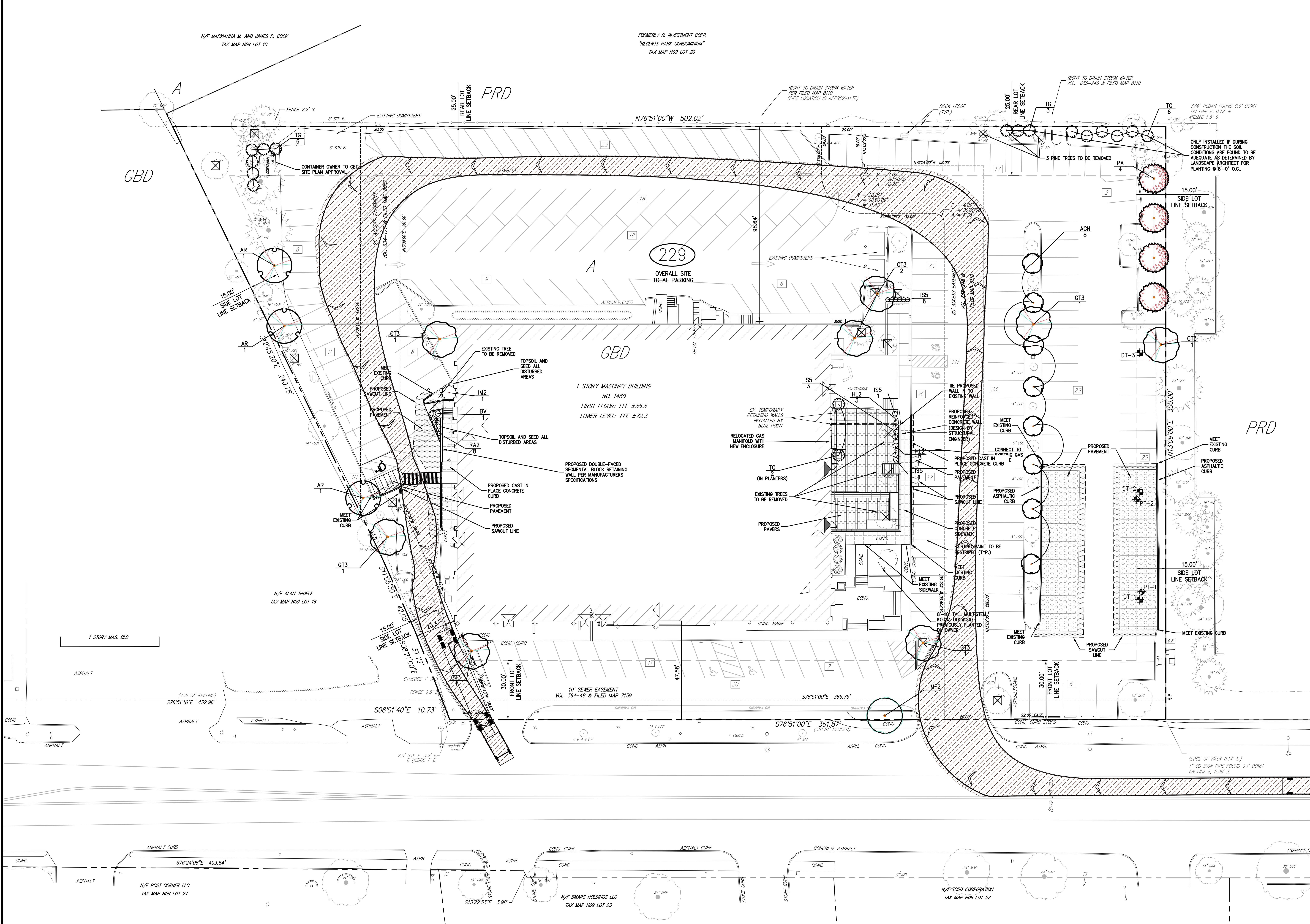

LEGEND

- EXISTING PROPERTY LINE
- ADJACENT PROPERTY LINE
- EXISTING SETBACK LINE
- ZONING LINE
- EXISTING WETLAND BUFFER
- EXISTING BUILDING OVERHANG
- EXISTING BUILDING LINE
- EXISTING PAVEMENT EDGE
- EXISTING CURB LINE
- EXISTING STONE WALL
- EXISTING RETAINING WALL
- EXISTING GUIDE RAIL
- EXISTING FENCE
- EXISTING TREE AND DESIGNATION
- EXISTING TREE AND DESIGNATION
- EXISTING TREE AND DESIGNATION
- EXISTING TREE LINE
- EXISTING UTILITY POLE
- EXISTING LIGHT POLE
- EXISTING SIGN
- EXISTING ROCK LEDGE
- PROPOSED BUILDING LINE
- PROPOSED CONCRETE CURB
- PROPOSED SAWCUT LINE
- PROPOSED CONCRETE APRON
- PROPOSED MULCH TRAIL
- PROPOSED RETAINING WALL (DESIGN BY OTHERS)
- PROPOSED FENCE
- PROPOSED DOUBLE ARM LIGHTING STANDARD (DESIGN BY OTHERS)
- PROPOSED SINGLE ARM LIGHTING STANDARD (DESIGN BY OTHERS)
- 2-4" WIDE YELLOW LINES 8"O.C.
- 12" WIDE WHITE STOP LINE
- TRAFFIC SIGN LOCATION & DESIGNATION
- PROPOSED DECIDUOUS TREE
- PROPOSED FLOWERING TREE
- PROPOSED EVERGREEN TREE
- PROPOSED SHRUBS/PERENNIALS
- PROPOSED TREE LINE
- EXISTING FEATURE TO BE REMOVED
- PT-1 PERCOLATION TEST LOCATIONS
- DT-1 DEEP PIT TEST LOCATIONS

NOTES:

1. ALL PLANT MATERIAL SPECIFIED ON THE DRAWINGS SHALL BE FIRST QUALITY NURSERY GROWN STOCK, CERTIFIED TRUE TO THEIR GENUS, SPECIES AND VARIETY, ALL OF WHICH SHALL CONFORM TO THE "AMERICAN STANDARD FOR NURSERY STOCK PUBLISHED BY AMERICANHORTI (ANSI Z60.1)," LATEST EDITION.
2. ALL AREAS OF THE SITE NOT OCCUPIED BY BUILDING, PAVEMENT, OR OTHER IMPERVIOUS SURFACE, AND NOT SPECIFIED AS BEING PLANTED WITH TREES, SHRUBS OR GROUND COVER, SHALL BE LAWN.

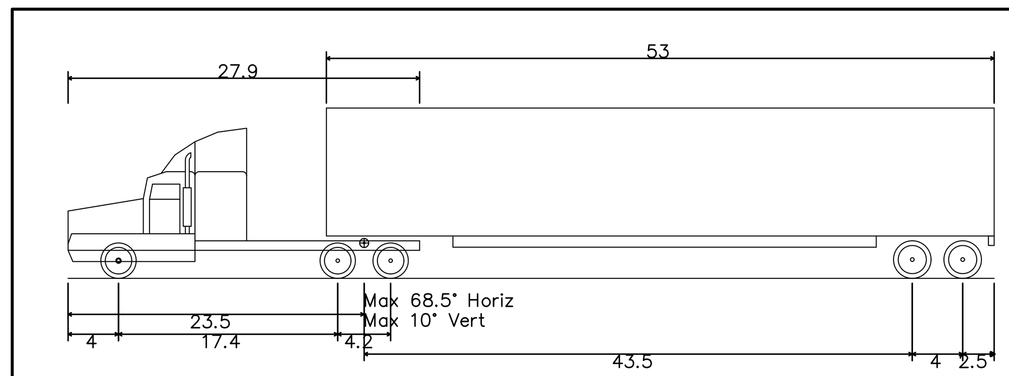

WB-67 – Interstate Semi-Trailer	
Overall Length	73.501ft
Overall Width	8.500ft
Overall Body Height	13.500ft
Min Body Ground Clearance	1.334ft
Max Track Width	8.500ft
Lock-to-lock time	6.00s
Max Steering Angle (Virtual)	28.40°

PLANT SCHEDULE 2020-06-09

DECIDUOUS TREES	QTY	BOTANICAL NAME	COMMON NAME	SIZE	ROOT COND.	REMARKS
AR	3	Acer Rubrum `Red Sunset`	Red Maple	B & B	4"Cal	
ACN	8	Amelanchier Canadensis	Shadblow Serviceberry	B & B	10` - 12` HT.	
GT3	8	Gleditsia triacanthos `Shademaster`	Shademaster Honey Locust	B & B	4"Cal	
MF2	1	Malus floribunda	Sargent Crabapple	B & B	2 1/2"-3" Cal.	
EVERGREEN TREES	QTY	BOTANICAL NAME	COMMON NAME	SIZE	ROOT COND.	REMARKS
PA	4	Picea abies	Norway Spruce	B & B	10` - 12` HT.	
SHRUBS	QTY	BOTANICAL NAME	COMMON NAME	SIZE	ROOT COND.	REMARKS
HL2	6	Hydrangea paniculata `Little Lime`	Little Lime Hydrangea	CONT.	5 gal	
IS5	11	Ilex glabra `Shamrock`	Inkberry	CONT.	5 gal	
TG	17	Thuja occidentalis `Green Giant`	Green Giant Arborvitae	B & B	8` - 10` HT.	

No.	Revision	Date	By
1.	ISSUED FOR COORDINATION	08/23/2019	TK
2.	ISSUED FOR SITE PLAN APPROVAL	09/12/2019	TK
3.	PLANNING AND ZONING COMMISSION SUBMISSION	11/21/2019	TK
4.	REVISED PER TOWN COMMENTS	02/14/2020	JR
5.	REVISED PER TREE BOARD COMMENTS	03/03/2020	JR

Previous Editions Obsolete

APPLICANT/OWNER:
URSTADT BIDDLE PROPERTIES, INC
321 RAILROAD AVENUE
GREENWICH, CT 06830

ARCHITECT:
STUDIO ARCHITECTURE NEW YORK
297 KNOLLWOOD RD, SUITE 209
WHITE PLAINS, NY 10607

JMC Planning, Engineering, Landscape Architecture & Land Surveying, PLLC
JMC Site Development Consultants, LLC
John Meyer Consulting, Inc.
120 BEDFORD ROAD • ARMONK, NY 10504
voice 914.273.5225 • fax 914.273.2102
www.jmcpllc.com

LANDSCAPING PLAN

GREENS FARMS PLAZA
1460 POST ROAD EAST
WESTPORT, CT 06880

ANY ALTERATION OF PLANS, SPECIFICATIONS, PLATS AND REPORTS BEARING THE SEAL OF A LICENSED PROFESSIONAL ENGINEER OR LICENSED LAND SURVEYOR IS A VIOLATION OF SECTION 7209 OF THE NEW YORK STATE EDUCATION LAW, EXCEPT AS PROVIDED FOR BY SECTION 7209, SUBSECTION 2.

Drawn: TK Approved: RA
Scale: 1" = 20'
Date: 06/20/2018
Project No: 15137
15137-LAND | L-100 | LAND.scr
Drawing No: L-100

COPYRIGHT © 2019 by JMC All Rights Reserved. No part of this document may be reproduced, stored in a retrieval system, or transmitted in any form or by means, electronic, mechanical, photocopying, recording or otherwise, without the prior written permission of JMC PLANNING, ENGINEERING, LANDSCAPE ARCHITECTURE & LAND SURVEYING, PLLC | JMC SITE DEVELOPMENT CONSULTANTS, LLC | JOHN MEYER CONSULTING, INC. (JMC). Any modifications or alterations to this document without the written permission of JMC shall render them invalid and unusable.

NOT FOR CONSTRUCTION